```
documentation of input data

output date: 27.03.2013 13:10:06

data file: ...elader\Großes Modell\KRASTA\00000 - MUSTER Schiffsbelader_V03

6 Subsystems
393 Beams
242 Nodes
24 Cross Sections
19 Load Cases
33 Mass Cases

units:
  mm  N  kg  sec  °C  °  -  .


output of Nodes
===============

node coordinates:
-----------------
```

subsystem name node name	node coordinates (resp. subsys.) x	y	z
boom			
K	3500.0	-13900.0	8600.0
K 1	2500.0	-13900.0	8600.0
K 2	3500.0	-18400.0	8600.0
K 3	2500.0	-18400.0	8600.0
K 4	3500.0	-16900.0	8600.0
K 5	2500.0	-16900.0	8600.0
K 6	3500.0	-8400.0	8600.0
K 7	2500.0	-8400.0	8600.0
K 49	3700.0	-5400.0	8500.0
K 50	2300.0	-5400.0	8500.0
K 53	2300.0	-7400.0	8500.0
K 54	2300.0	-9400.0	8500.0
K 55	2300.0	-11400.0	8500.0
K 56	2300.0	-13400.0	8500.0
K 57	2300.0	-15400.0	8500.0
K 58	2300.0	-17400.0	8500.0
K 59	2300.0	-19400.0	8500.0
K 60	2300.0	-21400.0	8500.0
K 61	3700.0	-23400.0	8500.0
K 62	3700.0	-7400.0	8500.0
K 63	3700.0	-9400.0	8500.0
K 64	3700.0	-11400.0	8500.0
K 65	3700.0	-13400.0	8500.0
K 66	3700.0	-15400.0	8500.0
K 67	3700.0	-17400.0	8500.0
K 68	3700.0	-19400.0	8500.0
K 69	3700.0	-21400.0	8500.0
K 70	2300.0	-23400.0	8500.0
K 71	2300.0	-7400.0	10300.0
K 72	3700.0	-7400.0	10300.0
K 73	2300.0	-9400.0	10300.0
K 74	2300.0	-11400.0	10300.0
K 75	2300.0	-13400.0	10300.0
K 76	2300.0	-15400.0	10300.0
K 77	2300.0	-17400.0	10300.0
K 78	2300.0	-19400.0	10300.0
K 79	3700.0	-21400.0	10300.0
K 80	2300.0	-21400.0	10300.0
K 81	3700.0	-9400.0	10300.0

subsystem name node name	node coordinates (resp. subsys.) x	y	z
K 82	3700.0	-11400.0	10300.0
K 83	3700.0	-13400.0	10300.0
K 84	3700.0	-15400.0	10300.0
K 85	3700.0	-17400.0	10300.0
K 86	3700.0	-19400.0	10300.0
K 87	3700.0	-25400.0	8500.0
K 88	2300.0	-19400.0	10700.0
K 89	2300.0	-25400.0	8500.0
K 90	3700.0	-23400.0	10300.0
K 91	2300.0	-23400.0	10300.0
K 92	3700.0	-19400.0	10700.0
K 93	2300.0	-13400.0	9400.0
K 94	2300.0	-11400.0	9400.0
K 95	2300.0	-9400.0	9400.0
K 96	2300.0	-7400.0	9400.0
K 97	3700.0	-13400.0	9400.0
K 98	3700.0	-11400.0	9400.0
K 99	3700.0	-9400.0	9400.0
K 100	3700.0	-7400.0	9400.0
K 101	2300.0	-6400.0	9400.0
K 102	3700.0	-6400.0	9400.0
K 103	2500.0	-13400.0	9400.0
K 104	2500.0	-5400.0	8500.0
K 105	2500.0	-7400.0	8500.0
K 106	2500.0	-9400.0	8500.0
K 107	2500.0	-11400.0	8500.0
K 108	2500.0	-23400.0	8500.0
K 109	2500.0	-13400.0	8500.0
K 110	2500.0	-11400.0	9400.0
K 111	2500.0	-9400.0	9400.0
K 112	2500.0	-7400.0	9400.0
K 113	2500.0	-6400.0	9400.0
K 114	3500.0	-13400.0	9400.0
K 115	3500.0	-11400.0	9400.0
K 116	3500.0	-9400.0	9400.0
K 117	3500.0	-7400.0	9400.0
K 118	3500.0	-6400.0	9400.0
K 119	3500.0	-5400.0	8500.0
K 120	3500.0	-7400.0	8500.0
K 121	3500.0	-9400.0	8500.0
K 122	3500.0	-11400.0	8500.0
K 123	3500.0	-23400.0	8500.0
K 124	3500.0	-13400.0	8500.0
K 125	2500.0	-21400.0	8500.0
K 126	2500.0	-19400.0	8500.0
K 127	2500.0	-17400.0	8500.0
K 128	2500.0	-15400.0	8500.0
K 129	3500.0	-21400.0	8500.0
K 130	3500.0	-19400.0	8500.0
K 131	2500.0	-12400.0	9400.0
K 132	3500.0	-17400.0	8500.0
K 133	3500.0	-15400.0	8500.0
K 134	3500.0	-12400.0	9400.0
K 135	2500.0	-10400.0	9400.0
K 136	3500.0	-10400.0	9400.0
K 138	3500.0	-21400.0	8600.0
K 139	3500.0	-19400.0	8600.0
K 140	3500.0	-17400.0	8600.0
K 141	3500.0	-15400.0	8600.0
K 143	3500.0	-11400.0	8600.0
K 144	3500.0	-9400.0	8600.0
K 145	3500.0	-7400.0	8600.0
K 146	3500.0	-5400.0	8600.0

subsystem name node name	node coordinates (resp. subsys.) x	y	z
K 147	2500.0	-5400.0	8600.0
K 148	2500.0	-7400.0	8600.0
K 149	2500.0	-9400.0	8600.0
K 150	2500.0	-11400.0	8600.0
K 152	2500.0	-15400.0	8600.0
K 153	2500.0	-17400.0	8600.0
K 154	2500.0	-19400.0	8600.0
K 155	2500.0	-21400.0	8600.0
K 157	2500.0	-8400.0	9400.0
K 158	3500.0	-8400.0	9400.0
K 159	2500.0	-5400.0	9400.0
K 160	2500.0	-4400.0	9400.0
K 161	2500.0	-3400.0	9400.0
K 162	3500.0	-5400.0	9400.0
K 163	3500.0	-4400.0	9400.0
K 164	3500.0	-3400.0	9400.0
K 191	3500.0	-23400.0	8600.0
K 192	3500.0	-13400.0	8600.0
K 193	2500.0	-13400.0	8600.0
K 194	2500.0	-23400.0	8600.0
K 195	3500.0	-21900.0	8600.0
K 196	2500.0	-21900.0	8600.0
portal			
K	.0	.0	4000.0
K 1	2250.0	.0	4000.0
K 2	6000.0	.0	4000.0
K 3	6000.0	-2500.0	4000.0
K 4	6000.0	-6150.0	4000.0
K 5	6000.0	-7900.0	4000.0
K 6	.0	-2500.0	4000.0
K 7	.0	-6150.0	4000.0
K 8	.0	-7900.0	4000.0
K 9	2250.0	-7900.0	4000.0
K 10	3000.0	-6150.0	4000.0
K 11	3000.0	-5400.0	4000.0
K 12	3000.0	-4650.0	4000.0
K 13	2250.0	-5400.0	4000.0
K 14	3750.0	-5400.0	4000.0
K 15	3750.0	.0	4000.0
K 16	.0	-2500.0	4250.0
K 17	2250.0	-2500.0	4250.0
K 18	6000.0	-2500.0	4250.0
K 19	7000.0	-7950.0	1000.0
K 20	7000.0	50.0	1000.0
K 21	-1000.0	-7950.0	1000.0
K 22	-1000.0	50.0	1000.0
K 23	3310.6	-6150.0	4000.0
K 24	3310.6	-4650.0	4000.0
K 25	2689.4	-6150.0	4000.0
K 26	2689.4	-4650.0	4000.0
K 27	2250.0	-5710.6	4000.0
K 28	3750.0	-5710.6	4000.0
K 29	2250.0	-5089.4	4000.0
K 30	3750.0	-5089.4	4000.0
K 31	3000.0	-5400.0	5500.0
K 32	3750.0	-7900.0	4000.0
K 33	3750.0	-2500.0	4250.0
K 34	.0	-4650.0	4000.0
K 35	6000.0	-4650.0	4000.0
K 36	3750.0	-2500.0	4000.0
K 37	2250.0	-2500.0	4000.0
K 38	3750.0	-4650.0	4000.0
K 39	2250.0	-4650.0	4000.0

subsystem name node name	node coordinates (resp. subsys.) x	y	z
K 40	2250.0	-6150.0	4000.0
K 41	3750.0	-6150.0	4000.0
Supp A1.	-1000.0	-7950.0	.0
Supp A2.	7000.0	-7950.0	.0
Supp B1.	-1000.0	50.0	.0
Supp B2.	7000.0	50.0	.0
rope			
K 51	3700.0	-7519.116	19972.997
K 52	2300.0	-7519.116	19972.997
K 88	2300.0	-19400.0	10700.0
K 92	3700.0	-19400.0	10700.0
top pulley			
K 45	2300.0	-6105.31	19205.469
K 46	3700.0	-6105.31	19205.469
K 51	3700.0	-6105.31	19805.469
K 52	2300.0	-6105.31	19805.469
trolley			
K	3500.0	-18400.01	8900.0
K 1	2500.0	-18400.002	8900.0
K 2	3500.0	-21400.01	8900.0
K 3	2500.0	-21400.002	8900.0
K 137	3500.0	-23400.0	8600.0
K 142	3500.0	-13400.0	8600.0
K 151	2500.0	-13400.0	8600.0
K 156	2500.0	-23400.0	8600.0
K 165	3500.0	-23400.0	8900.0
K 166	2500.0	-23400.0	8900.0
K 167	3500.0	-21900.0	8900.0
K 168	2500.0	-21900.0	8900.0
K 169	3500.0	-13400.0	8900.0
K 170	2500.0	-13400.0	8900.0
K 171	3500.0	-21900.0	8600.0
K 172	2500.0	-21900.0	8600.0
upper crane			
K	4000.0	-4400.0	8000.0
K 1	2000.0	-4400.0	8000.0
K 2	4000.0	-6400.0	8000.0
K 3	2000.0	-6400.0	8000.0
K 4	6000.0	-7400.0	8000.0
K 5	6000.0	-5400.0	8000.0
K 6	4000.0	-7000.0	11500.0
K 7	2000.0	-7000.0	11500.0
K 8	4000.048	6600.0	11500.0
K 9	2000.048	6600.0	11500.0
K 10	3700.004	-6662.793	19850.184
K 11	2300.004	-6662.788	19850.193
K 12	3699.971	-912.767	11850.24
K 13	2299.971	-912.763	11850.249
K 14	2585.9	-4400.0	8000.0
K 15	2585.9	-6400.0	8000.0
K 16	3414.1	-4400.0	8000.0
K 17	3414.1	-6400.0	8000.0
K 18	4000.0	-4985.9	8000.0
K 19	2000.0	-4985.9	8000.0
K 20	4000.0	-5814.1	8000.0
K 21	2000.0	-5814.1	8000.0
K 31	3000.0	-5400.0	6000.0
K 32	3000.0	-5400.0	8000.0
K 33	2000.0	-5400.0	8000.0
K 34	4000.0	-5400.0	8000.0
K 35	2000.0	-7400.0	8000.0
K 36	4000.0	-7400.0	8000.0
K 37	2000.0	-2400.0	8000.0

subsystem name node name	node coordinates (resp. subsys.) x	y	z
K 38	4000.0	-2400.0	8000.0
K 39	2000.0	-7400.0	11500.0
K 40	4000.0	-7400.0	11500.0
K 41	2000.04	4600.0	11500.0
K 42	4000.04	4600.0	11500.0
K 43	4000.0	-7150.0	19500.0
K 44	2000.0	-7150.0	19500.0
K 45	2300.0	-7150.0	19500.0
K 46	3700.0	-7150.0	19500.0
K 47	2300.0	-5400.0	8000.0
K 48	3700.0	-5400.0	8000.0
K 49	3700.0	-5400.0	8500.0
K 50	2300.0	-5400.0	8500.0
K 175	4000.0	-1400.0	11500.0
K 176	2000.0	-1400.0	11500.0
K 177	2300.0	-1400.0	11500.0
K 178	3700.0	-1400.0	11500.0
K 179	4000.056	8600.0	11500.0
K 180	2000.056	8600.0	11500.0

node support joints:

subsystem name node name	x y z xx yy zz	
portal		
Supp A1.	-- -- -- GG -- GG	I
Supp A2.	GG -- -- GG -- GG	I
Supp B1.	-- -- -- GG -- GG	I
Supp B2.	GG -- -- GG -- GG	I

KRASTA® V9.7.0ß.4315 ©Kühne BSB GmbH, DE 64295 Darmstadt, +49(0)6151/397690-0
Lizenznehmer: Kühne BSB GmbH, Darmstadt

```
documentation of input data

output date: 27.03.2013 13:10:23

data file: ...elader\Großes Modell\KRASTA\00000 - MUSTER Schiffsbelader_V03

6 Subsystems
393 Beams
242 Nodes
24 Cross Sections
19 Load Cases
33 Mass Cases

units:
  mm  N  kg  sec  °C  °  -  .


output of Beams
===============

start, end nodes:
-----------------

subsystem name          |
    beam name           |    start node        |      end node
------------------------|----------------------|------------------------
boom                    |                      |
    Item 012.  50       | K  50                | K 104
    Item 012.  51       | K  71                | K 101
    Item 012.  52       | K  72                | K 102
    Item 012.  53       | K  53                | K  50
    Item 012.  54       | K  62                | K  49
    Item 012.  55       | K 101                | K  50
    Item 012.  56       | K 102                | K  49
    Item 012.  57       | K 104                | K 119
    Item 012.  58       | K 119                | K  49
    Item 013.  49       | K 122                | K  64
    Item 013.  50       | K 123                | K  61
    Item 013.  51       | K 124                | K  65
    Item 013.  52       | K  69                | K 129
    Item 013.  53       | K  60                | K 125
    Item 013.  54       | K  68                | K 130
    Item 013.  55       | K  59                | K 126
    Item 013.  56       | K  67                | K 132
    Item 013.  57       | K  58                | K 127
    Item 013.  58       | K  66                | K 133
    Item 013.  59       | K  57                | K 128
    Item 013.  60       | K  53                | K 105
    Item 013.  61       | K  54                | K 106
    Item 013.  62       | K  55                | K 107
    Item 013.  63       | K  78                | K  77
    Item 013.  64       | K  77                | K  76
    Item 013.  65       | K  76                | K  75
    Item 013.  66       | K  75                | K  74
    Item 013.  67       | K  74                | K  73
    Item 013.  68       | K  73                | K  71
    Item 013.  69       | K  86                | K  85
    Item 013.  70       | K  85                | K  84
    Item 013.  71       | K  84                | K  83
    Item 013.  72       | K  83                | K  82
    Item 013.  73       | K  82                | K  81
    Item 013.  74       | K  81                | K  72
    Item 013.  75       | K  60                | K  59
    Item 013.  76       | K  59                | K  58
    Item 013.  77       | K  58                | K  57
    Item 013.  78       | K  57                | K  56
```

subsystem name beam name	start node	end node
Item 013. 79	K 56	K 55
Item 013. 80	K 55	K 54
Item 013. 81	K 54	K 53
Item 013. 82	K 69	K 68
Item 013. 83	K 68	K 67
Item 013. 84	K 67	K 66
Item 013. 85	K 66	K 65
Item 013. 86	K 65	K 64
Item 013. 87	K 64	K 63
Item 013. 88	K 63	K 62
Item 013. 89	K 80	K 78
Item 013. 90	K 79	K 86
Item 013. 91	K 61	K 69
Item 013. 92	K 70	K 60
Item 013. 93	K 70	K 108
Item 013. 94	K 87	K 61
Item 013. 95	K 89	K 70
Item 013. 96	K 89	K 91
Item 013. 97	K 91	K 80
Item 013. 98	K 87	K 90
Item 013. 99	K 90	K 79
Item 013. 100	K 56	K 109
Item 013. 101	K 105	K 120
Item 013. 102	K 106	K 121
Item 013. 103	K 107	K 122
Item 013. 104	K 108	K 123
Item 013. 105	K 109	K 124
Item 013. 106	K 120	K 62
Item 013. 107	K 121	K 63
Item 014. 1	K 56	K 93
Item 014. 2	K 55	K 94
Item 014. 3	K 54	K 95
Item 014. 4	K 53	K 96
Item 014. 5	K 65	K 97
Item 014. 6	K 64	K 98
Item 014. 7	K 63	K 99
Item 014. 8	K 62	K 100
Item 014. 9	K 93	K 75
Item 014. 10	K 94	K 74
Item 014. 11	K 95	K 73
Item 014. 12	K 96	K 71
Item 014. 13	K 97	K 83
Item 014. 14	K 98	K 82
Item 014. 15	K 99	K 81
Item 014. 16	K 100	K 72
Item 015. 12	K 57	K 76
Item 015. 13	K 68	K 86
Item 015. 14	K 67	K 85
Item 015. 15	K 66	K 84
Item 015. 16	K 86	K 67
Item 015. 17	K 67	K 84
Item 015. 18	K 84	K 65
Item 015. 19	K 65	K 82
Item 015. 20	K 82	K 63
Item 015. 21	K 63	K 72
Item 015. 22	K 78	K 58
Item 015. 23	K 58	K 76
Item 015. 24	K 76	K 56
Item 015. 25	K 56	K 74
Item 015. 26	K 74	K 54
Item 015. 27	K 54	K 71
Item 015. 28	K 78	K 85
Item 015. 29	K 85	K 76

subsystem name beam name	start node	end node
Item 015. 30	K 76	K 83
Item 015. 31	K 83	K 74
Item 015. 32	K 74	K 81
Item 015. 33	K 81	K 71
Item 015. 34	K 64	K 54
Item 015. 35	K 63	K 53
Item 015. 36	K 62	K 50
Item 015. 37	K 80	K 79
Item 015. 38	K 79	K 78
Item 015. 39	K 69	K 79
Item 015. 40	K 60	K 80
Item 015. 41	K 89	K 87
Item 015. 42	K 91	K 90
Item 015. 43	K 61	K 90
Item 015. 44	K 70	K 91
Item 015. 45	K 87	K 70
Item 015. 46	K 91	K 79
Item 015. 47	K 90	K 69
Item 015. 48	K 91	K 60
Item 015. 49	K 65	K 55
Item 015. 50	K 78	K 86
Item 015. 51	K 77	K 85
Item 015. 52	K 76	K 84
Item 015. 53	K 75	K 83
Item 015. 54	K 74	K 82
Item 015. 55	K 73	K 81
Item 015. 56	K 71	K 72
Item 015. 57	K 60	K 78
Item 015. 58	K 69	K 86
Item 015. 59	K 59	K 78
Item 015. 60	K 58	K 77
Item 016. 11	K 135	K 111
Item 016. 12	K 136	K 116
Item 016. 13	K 157	K 112
Item 016. 14	K 158	K 117
Item 016. 15	K 113	K 159
Item 016. 16	K 159	K 160
Item 016. 17	K 160	K 161
Item 016. 18	K 118	K 162
Item 016. 19	K 162	K 163
Item 016. 20	K 163	K 164
Item 016. 21	K 191	K 195
Item 016. 22	K 138	K 139
Item 016. 23	K 139	K 2
Item 016. 24	K 140	K 4
Item 016. 25	K 141	K
Item 016. 26	K 192	K 143
Item 016. 27	K 143	K 144
Item 016. 28	K 144	K 6
Item 016. 29	K 145	K 146
Item 016. 30	K 194	K 196
Item 016. 31	K 155	K 154
Item 016. 32	K 154	K 3
Item 016. 33	K 153	K 5
Item 016. 34	K 152	K 1
Item 016. 35	K 193	K 150
Item 016. 36	K 150	K 149
Item 016. 37	K 149	K 7
Item 016. 38	K 148	K 147
Item 016. 39	K	K 192
Item 016. 40	K 1	K 193
Item 016. 41	K 2	K 140
Item 016. 42	K 3	K 153

subsystem name beam name	start node	end node
Item 016. 43	K 195	K 138
Item 016. 44	K 196	K 155
Item 016. 45	K 4	K 141
Item 016. 46	K 5	K 152
Item 016. 47	K 6	K 145
Item 016. 48	K 7	K 148
Item 016. 49	K 103	K 131
Item 016. 50	K 114	K 134
Item 016. 51	K 110	K 135
Item 016. 52	K 115	K 136
Item 016. 53	K 111	K 157
Item 016. 54	K 116	K 158
Item 016. 55	K 112	K 113
Item 016. 56	K 117	K 118
Item 016. 57	K 131	K 110
Item 016. 58	K 134	K 115
Item 017. 1	K 103	K 114
Item 017. 2	K 110	K 115
Item 017. 3	K 111	K 116
Item 017. 4	K 112	K 117
Item 017. 5	K 113	K 118
Item 017. 6	K 131	K 134
Item 017. 7	K 135	K 136
Item 017. 8	K 157	K 158
Item 017. 9	K 159	K 162
Item 017. 10	K 160	K 163
Item 017. 11	K 161	K 164
Item 018. 1	K 114	K 131
Item 018. 2	K 131	K 115
Item 018. 3	K 115	K 135
Item 018. 4	K 135	K 116
Item 018. 5	K 116	K 157
Item 018. 6	K 157	K 117
Item 018. 7	K 117	K 113
Item 018. 8	K 113	K 162
Item 018. 9	K 162	K 160
Item 018. 10	K 160	K 164
rigid 1	K 86	K 92
rigid 2	K 78	K 88
rigid 3	K 108	K 194
rigid 4	K 123	K 191
rigid 5	K 129	K 138
rigid 6	K 125	K 155
rigid 7	K 130	K 139
rigid 8	K 126	K 154
rigid 9	K 132	K 140
rigid 10	K 127	K 153
rigid 11	K 133	K 141
rigid 12	K 128	K 152
rigid 13	K 124	K 192
rigid 14	K 109	K 193
rigid 15	K 122	K 143
rigid 16	K 107	K 150
rigid 17	K 121	K 144
rigid 18	K 106	K 149
rigid 19	K 120	K 145
rigid 20	K 105	K 148
rigid 21	K 119	K 146
rigid 22	K 104	K 147
rigid 23	K 102	K 118
rigid 24	K 101	K 113
rigid 25	K 100	K 117
rigid 26	K 96	K 112

subsystem name beam name	start node	end node
rigid 27	K 99	K 116
rigid 28	K 95	K 111
rigid 29	K 98	K 115
rigid 30	K 94	K 110
rigid 31	K 97	K 114
rigid 32	K 93	K 103
portal		
Item 001. 41	K 8	K 21
Item 001. 42	K 5	K 19
Item 001. 43	K	K 22
Item 001. 44	K 2	K 20
Item 002. 1	K	K 1
Item 002. 2	K 1	K 15
Item 002. 3	K 8	K 9
Item 002. 4	K 9	K 32
Item 002. 11	K 15	K 2
Item 002. 12	K 32	K 5
Item 003. 1	K	K 6
Item 003. 2	K 6	K 34
Item 003. 3	K 7	K 8
Item 003. 4	K 2	K 3
Item 003. 5	K 3	K 35
Item 003. 6	K 4	K 5
Item 003. 7	K 25	K 10
Item 003. 8	K 10	K 23
Item 003. 9	K 26	K 12
Item 003. 10	K 12	K 24
Item 003. 11	K 29	K 13
Item 003. 12	K 13	K 27
Item 003. 13	K 30	K 14
Item 003. 14	K 14	K 28
Item 003. 15	K 34	K 7
Item 003. 16	K 35	K 4
Item 003. 17	K 9	K 40
Item 003. 18	K 32	K 41
Item 003. 19	K 30	K 38
Item 003. 20	K 29	K 39
Item 003. 21	K 7	K 40
Item 003. 22	K 34	K 39
Item 003. 23	K 23	K 41
Item 003. 24	K 24	K 38
Item 003. 25	K 36	K 15
Item 003. 26	K 37	K 1
Item 003. 27	K 38	K 36
Item 003. 28	K 39	K 37
Item 003. 29	K 40	K 27
Item 003. 30	K 41	K 28
Item 003. 31	K 41	K 4
Item 003. 32	K 38	K 35
Item 003. 33	K 40	K 25
Item 003. 34	K 39	K 26
Item 004. 1	K 27	K 25
Item 004. 2	K 23	K 28
Item 004. 3	K 29	K 26
Item 004. 4	K 24	K 30
Item 005. 1	K 16	K 17
Item 005. 2	K 17	K 33
Item 005. 3	K 33	K 18
rigid 33	K 6	K 16
rigid 34	K 3	K 18
rigid 35	K 29	K 11
rigid 36	K 26	K 11
rigid 37	K 24	K 11

subsystem name beam name	start node	end node
rigid 38	K 30	K 11
rigid 39	K 28	K 11
rigid 40	K 23	K 11
rigid 41	K 25	K 11
rigid 42	K 27	K 11
rigid 43	K 21	Supp A1.
rigid 44	K 19	Supp A2.
rigid 45	K 22	Supp B1.
rigid 46	K 20	Supp B2.
rigid 47	K 11	K 31
rigid 81	K 36	K 33
rigid 82	K 37	K 17
rope		
Item 020. 1	K 52	K 88
Item 020. 2	K 51	K 92
top pulley		
rigid 50	K 46	K 51
rigid 51	K 45	K 52
trolley		
Item 019. 1	K 165	K 167
Item 019. 2	K 166	K 168
Item 019. 3	K 167	K 2
Item 019. 4	K 168	K 3
Item 019. 5	K	K 169
Item 019. 6	K 1	K 170
Item 019. 7	K 166	K 165
Item 019. 8	K 168	K 167
Item 019. 9	K 170	K 169
Item 019. 10	K 2	K
Item 019. 11	K 3	K 1
rigid 52	K 137	K 165
rigid 53	K 156	K 166
rigid 54	K 172	K 168
rigid 55	K 171	K 167
rigid 56	K 142	K 169
rigid 57	K 151	K 170
upper crane		
Item 006. 1	K 38	K
Item 006. 2	K 34	K 20
Item 006. 3	K 37	K 1
Item 006. 4	K 33	K 21
Item 006. 5	K	K 18
Item 006. 6	K 1	K 19
Item 006. 7	K 2	K 36
Item 006. 8	K 3	K 35
Item 006. 9	K 1	K 14
Item 006. 10	K 3	K 15
Item 006. 11	K 14	K 16
Item 006. 12	K 15	K 17
Item 006. 13	K 16	K
Item 006. 14	K 17	K 2
Item 006. 15	K 18	K 34
Item 006. 16	K 19	K 33
Item 006. 17	K 20	K 2
Item 006. 18	K 21	K 3
Item 006. 19	K 19	K 14
Item 006. 20	K 16	K 18
Item 006. 21	K 20	K 17
Item 006. 22	K 15	K 21
Item 007. 1	K 35	K 36
Item 007. 2	K 37	K 38
Item 007. 3	K 42	K 175
Item 007. 4	K 41	K 176

subsystem name beam name	start node	end node
Item 007. 5	K 175	K 6
Item 007. 6	K 176	K 7
Item 008. 1	K 39	K 40
Item 008. 2	K 36	K 40
Item 008. 3	K 35	K 39
Item 009. 1	K 40	K 43
Item 009. 2	K 39	K 44
Item 010. 1	K 41	K 42
Item 010. 2	K 41	K 44
Item 010. 3	K 42	K 43
Item 011. 1	K 44	K 45
Item 011. 2	K 46	K 43
Item 011. 3	K 45	K 46
rigid 58	K 31	K 32
rigid 59	K 33	K 47
rigid 60	K 48	K 34
rigid 61	K 48	K 49
rigid 62	K 47	K 50
rigid 63	K 176	K 177
rigid 64	K 177	K 178
rigid 65	K 178	K 175
rigid 66	K 42	K 8
rigid 67	K 41	K 9
rigid 68	K 180	K 179
rigid 69	K 36	K 4
rigid 70	K 34	K 5
rigid 71	K 6	K 40
rigid 72	K 7	K 39
rigid 73	K 8	K 179
rigid 74	K 9	K 180
rigid 75	K 46	K 10
rigid 76	K 45	K 11
rigid 77	K 10	K 12
rigid 78	K 11	K 13
rigid 79	K 178	K 12
rigid 80	K 177	K 13
rigid 83	K 21	K 32
rigid 84	K 15	K 32
rigid 85	K 17	K 32
rigid 86	K 20	K 32
rigid 87	K 18	K 32
rigid 88	K 16	K 32
rigid 89	K 14	K 32
rigid 90	K 19	K 32

material and cross section:

subsystem name beam name	cross section	material
boom		
Item 012. 50	RR 200x200x16.0_	S235_
Item 012. 51	RR 200x200x16.0_	S235_
Item 012. 52	RR 200x200x16.0_	S235_
Item 012. 53	RR 200x200x16.0_	S235_
Item 012. 54	RR 200x200x16.0_	S235_
Item 012. 55	RR 200x200x16.0_	S235_
Item 012. 56	RR 200x200x16.0_	S235_
Item 012. 57	RR 200x200x16.0_	S235_
Item 012. 58	RR 200x200x16.0_	S235_
Item 013. 49	RR 200x200x10.	S235_
Item 013. 50	RR 200x200x10.	S235_

subsystem name beam name	cross section	material
Item 013. 51	RR 200x200x10.	S235_
Item 013. 52	RR 200x200x10.	S235_
Item 013. 53	RR 200x200x10.	S235_
Item 013. 54	RR 200x200x10.	S235_
Item 013. 55	RR 200x200x10.	S235_
Item 013. 56	RR 200x200x10.	S235_
Item 013. 57	RR 200x200x10.	S235_
Item 013. 58	RR 200x200x10.	S235_
Item 013. 59	RR 200x200x10.	S235_
Item 013. 60	RR 200x200x10.	S235_
Item 013. 61	RR 200x200x10.	S235_
Item 013. 62	RR 200x200x10.	S235_
Item 013. 63	RR 200x200x10.	S235_
Item 013. 64	RR 200x200x10.	S235_
Item 013. 65	RR 200x200x10.	S235_
Item 013. 66	RR 200x200x10.	S235_
Item 013. 67	RR 200x200x10.	S235_
Item 013. 68	RR 200x200x10.	S235_
Item 013. 69	RR 200x200x10.	S235_
Item 013. 70	RR 200x200x10.	S235_
Item 013. 71	RR 200x200x10.	S235_
Item 013. 72	RR 200x200x10.	S235_
Item 013. 73	RR 200x200x10.	S235_
Item 013. 74	RR 200x200x10.	S235_
Item 013. 75	RR 200x200x10.	S235_
Item 013. 76	RR 200x200x10.	S235_
Item 013. 77	RR 200x200x10.	S235_
Item 013. 78	RR 200x200x10.	S235_
Item 013. 79	RR 200x200x10.	S235_
Item 013. 80	RR 200x200x10.	S235_
Item 013. 81	RR 200x200x10.	S235_
Item 013. 82	RR 200x200x10.	S235_
Item 013. 83	RR 200x200x10.	S235_
Item 013. 84	RR 200x200x10.	S235_
Item 013. 85	RR 200x200x10.	S235_
Item 013. 86	RR 200x200x10.	S235_
Item 013. 87	RR 200x200x10.	S235_
Item 013. 88	RR 200x200x10.	S235_
Item 013. 89	RR 200x200x10.	S235_
Item 013. 90	RR 200x200x10.	S235_
Item 013. 91	RR 200x200x10.	S235_
Item 013. 92	RR 200x200x10.	S235_
Item 013. 93	RR 200x200x10.	S235_
Item 013. 94	RR 200x200x10.	S235_
Item 013. 95	RR 200x200x10.	S235_
Item 013. 96	RR 200x200x10.	S235_
Item 013. 97	RR 200x200x10.	S235_
Item 013. 98	RR 200x200x10.	S235_
Item 013. 99	RR 200x200x10.	S235_
Item 013. 100	RR 200x200x10.	S235_
Item 013. 101	RR 200x200x10.	S235_
Item 013. 102	RR 200x200x10.	S235_
Item 013. 103	RR 200x200x10.	S235_
Item 013. 104	RR 200x200x10.	S235_
Item 013. 105	RR 200x200x10.	S235_
Item 013. 106	RR 200x200x10.	S235_
Item 013. 107	RR 200x200x10.	S235_
Item 014. 1	RR 120x120x8.	S235_
Item 014. 2	RR 120x120x8.	S235_
Item 014. 3	RR 120x120x8.	S235_
Item 014. 4	RR 120x120x8.	S235_
Item 014. 5	RR 120x120x8.	S235_
Item 014. 6	RR 120x120x8.	S235_

subsystem name beam name	cross section	material
Item 014. 7	RR 120x120x8.	S235_
Item 014. 8	RR 120x120x8.	S235_
Item 014. 9	RR 120x120x8.	S235_
Item 014. 10	RR 120x120x8.	S235_
Item 014. 11	RR 120x120x8.	S235_
Item 014. 12	RR 120x120x8.	S235_
Item 014. 13	RR 120x120x8.	S235_
Item 014. 14	RR 120x120x8.	S235_
Item 014. 15	RR 120x120x8.	S235_
Item 014. 16	RR 120x120x8.	S235_
Item 015. 12	RR 80x80x6.3.	S235_
Item 015. 13	RR 80x80x6.3.	S235_
Item 015. 14	RR 80x80x6.3.	S235_
Item 015. 15	RR 80x80x6.3.	S235_
Item 015. 16	RR 80x80x6.3.	S235_
Item 015. 17	RR 80x80x6.3.	S235_
Item 015. 18	RR 80x80x6.3.	S235_
Item 015. 19	RR 80x80x6.3.	S235_
Item 015. 20	RR 80x80x6.3.	S235_
Item 015. 21	RR 80x80x6.3.	S235_
Item 015. 22	RR 80x80x6.3.	S235_
Item 015. 23	RR 80x80x6.3.	S235_
Item 015. 24	RR 80x80x6.3.	S235_
Item 015. 25	RR 80x80x6.3.	S235_
Item 015. 26	RR 80x80x6.3.	S235_
Item 015. 27	RR 80x80x6.3.	S235_
Item 015. 28	RR 80x80x6.3.	S235_
Item 015. 29	RR 80x80x6.3.	S235_
Item 015. 30	RR 80x80x6.3.	S235_
Item 015. 31	RR 80x80x6.3.	S235_
Item 015. 32	RR 80x80x6.3.	S235_
Item 015. 33	RR 80x80x6.3.	S235_
Item 015. 34	RR 80x80x6.3.	S235_
Item 015. 35	RR 80x80x6.3.	S235_
Item 015. 36	RR 80x80x6.3.	S235_
Item 015. 37	RR 80x80x6.3.	S235_
Item 015. 38	RR 80x80x6.3.	S235_
Item 015. 39	RR 80x80x6.3.	S235_
Item 015. 40	RR 80x80x6.3.	S235_
Item 015. 41	RR 80x80x6.3.	S235_
Item 015. 42	RR 80x80x6.3.	S235_
Item 015. 43	RR 80x80x6.3.	S235_
Item 015. 44	RR 80x80x6.3.	S235_
Item 015. 45	RR 80x80x6.3.	S235_
Item 015. 46	RR 80x80x6.3.	S235_
Item 015. 47	RR 80x80x6.3.	S235_
Item 015. 48	RR 80x80x6.3.	S235_
Item 015. 49	RR 80x80x6.3.	S235_
Item 015. 50	RR 80x80x6.3.	S235_
Item 015. 51	RR 80x80x6.3.	S235_
Item 015. 52	RR 80x80x6.3.	S235_
Item 015. 53	RR 80x80x6.3.	S235_
Item 015. 54	RR 80x80x6.3.	S235_
Item 015. 55	RR 80x80x6.3.	S235_
Item 015. 56	RR 80x80x6.3.	S235_
Item 015. 57	RR 80x80x6.3.	S235_
Item 015. 58	RR 80x80x6.3.	S235_
Item 015. 59	RR 80x80x6.3.	S235_
Item 015. 60	RR 80x80x6.3.	S235_
Item 016. 11	HE B 200_	S235_
Item 016. 12	HE B 200_	S235_
Item 016. 13	HE B 200_	S235_
Item 016. 14	HE B 200_	S235_

subsystem name beam name	cross section	material
Item 016. 15	HE B 200_	S235_
Item 016. 16	HE B 200_	S235_
Item 016. 17	HE B 200_	S235_
Item 016. 18	HE B 200_	S235_
Item 016. 19	HE B 200_	S235_
Item 016. 20	HE B 200_	S235_
Item 016. 21	HE B 200_	S235_
Item 016. 22	HE B 200_	S235_
Item 016. 23	HE B 200_	S235_
Item 016. 24	HE B 200_	S235_
Item 016. 25	HE B 200_	S235_
Item 016. 26	HE B 200_	S235_
Item 016. 27	HE B 200_	S235_
Item 016. 28	HE B 200_	S235_
Item 016. 29	HE B 200_	S235_
Item 016. 30	HE B 200_	S235_
Item 016. 31	HE B 200_	S235_
Item 016. 32	HE B 200_	S235_
Item 016. 33	HE B 200_	S235_
Item 016. 34	HE B 200_	S235_
Item 016. 35	HE B 200_	S235_
Item 016. 36	HE B 200_	S235_
Item 016. 37	HE B 200_	S235_
Item 016. 38	HE B 200_	S235_
Item 016. 39	HE B 200_	S235_
Item 016. 40	HE B 200_	S235_
Item 016. 41	HE B 200_	S235_
Item 016. 42	HE B 200_	S235_
Item 016. 43	HE B 200_	S235_
Item 016. 44	HE B 200_	S235_
Item 016. 45	HE B 200_	S235_
Item 016. 46	HE B 200_	S235_
Item 016. 47	HE B 200_	S235_
Item 016. 48	HE B 200_	S235_
Item 016. 49	HE B 200_	S235_
Item 016. 50	HE B 200_	S235_
Item 016. 51	HE B 200_	S235_
Item 016. 52	HE B 200_	S235_
Item 016. 53	HE B 200_	S235_
Item 016. 54	HE B 200_	S235_
Item 016. 55	HE B 200_	S235_
Item 016. 56	HE B 200_	S235_
Item 016. 57	HE B 200_	S235_
Item 016. 58	HE B 200_	S235_
Item 017. 1	IPE 120_	S235_
Item 017. 2	IPE 120_	S235_
Item 017. 3	IPE 120_	S235_
Item 017. 4	IPE 120_	S235_
Item 017. 5	IPE 120_	S235_
Item 017. 6	IPE 120_	S235_
Item 017. 7	IPE 120_	S235_
Item 017. 8	IPE 120_	S235_
Item 017. 9	IPE 120_	S235_
Item 017. 10	IPE 120_	S235_
Item 017. 11	IPE 120_	S235_
Item 018. 1	RR 40x40x4.	S235_
Item 018. 2	RR 40x40x4.	S235_
Item 018. 3	RR 40x40x4.	S235_
Item 018. 4	RR 40x40x4.	S235_
Item 018. 5	RR 40x40x4.	S235_
Item 018. 6	RR 40x40x4.	S235_
Item 018. 7	RR 40x40x4.	S235_
Item 018. 8	RR 40x40x4.	S235_

subsystem name beam name	cross section	material
Item 018. 9	RR 40x40x4.	S235_
Item 018. 10	RR 40x40x4.	S235_
rigid 1	starr	S235_
rigid 2	starr	S235_
rigid 3	starr	S235_
rigid 4	starr	S235_
rigid 5	starr	S235_
rigid 6	starr	S235_
rigid 7	starr	S235_
rigid 8	starr	S235_
rigid 9	starr	S235_
rigid 10	starr	S235_
rigid 11	starr	S235_
rigid 12	starr	S235_
rigid 13	starr	S235_
rigid 14	starr	S235_
rigid 15	starr	S235_
rigid 16	starr	S235_
rigid 17	starr	S235_
rigid 18	starr	S235_
rigid 19	starr	S235_
rigid 20	starr	S235_
rigid 21	starr	S235_
rigid 22	starr	S235_
rigid 23	starr	S235_
rigid 24	starr	S235_
rigid 25	starr	S235_
rigid 26	starr	S235_
rigid 27	starr	S235_
rigid 28	starr	S235_
rigid 29	starr	S235_
rigid 30	starr	S235_
rigid 31	starr	S235_
rigid 32	starr	S235_
portal		
Item 001. 41	RR_800x400x20.	S235_
	RR 300x300x20. 1	
Item 001. 42	RR_800x400x20.	S235_
	RR 300x300x20. 1	
Item 001. 43	RR_800x400x20.	S235_
	RR 300x300x20. 1	
Item 001. 44	RR_800x400x20.	S235_
	RR 300x300x20. 1	
Item 002. 1	RR 800x400x20.	S235_
Item 002. 2	RR 800x400x20.	S235_
Item 002. 3	RR 800x400x20.	S235_
Item 002. 4	RR 800x400x20.	S235_
Item 002. 11	RR 800x400x20.	S235_
Item 002. 12	RR 800x400x20.	S235_
Item 003. 1	RR 800x400x20x15	S235_
Item 003. 2	RR 800x400x20x15	S235_
Item 003. 3	RR 800x400x20x15	S235_
Item 003. 4	RR 800x400x20x15	S235_
Item 003. 5	RR 800x400x20x15	S235_
Item 003. 6	RR 800x400x20x15	S235_
Item 003. 7	RR 800x400x20x15	S235_
Item 003. 8	RR 800x400x20x15	S235_
Item 003. 9	RR 800x400x20x15	S235_
Item 003. 10	RR 800x400x20x15	S235_
Item 003. 11	RR 800x400x20x15	S235_
Item 003. 12	RR 800x400x20x15	S235_
Item 003. 13	RR 800x400x20x15	S235_
Item 003. 14	RR 800x400x20x15	S235_

subsystem name / beam name	cross section	material
Item 003. 15	RR 800x400x20x15	S235_
Item 003. 16	RR 800x400x20x15	S235_
Item 003. 17	RR 800x400x20x15	S235_
Item 003. 18	RR 800x400x20x15	S235_
Item 003. 19	RR 800x400x20x15	S235_
Item 003. 20	RR 800x400x20x15	S235_
Item 003. 21	RR 800x400x20x15	S235_
Item 003. 22	RR 800x400x20x15	S235_
Item 003. 23	RR 800x400x20x15	S235_
Item 003. 24	RR 800x400x20x15	S235_
Item 003. 25	RR 800x400x20x15	S235_
Item 003. 26	RR 800x400x20x15	S235_
Item 003. 27	RR 800x400x20x15	S235_
Item 003. 28	RR 800x400x20x15	S235_
Item 003. 29	RR 800x400x20x15	S235_
Item 003. 30	RR 800x400x20x15	S235_
Item 003. 31	RR 800x400x20x15	S235_
Item 003. 32	RR 800x400x20x15	S235_
Item 003. 33	RR 800x400x20x15	S235_
Item 003. 34	RR 800x400x20x15	S235_
Item 004. 1	DT 800x300x20x15	S235_
Item 004. 2	DT 800x300x20x15	S235_
Item 004. 3	DT 800x300x20x15	S235_
Item 004. 4	DT 800x300x20x15	S235_
Item 005. 1	IPE 300_	S235_
Item 005. 2	IPE 300_	S235_
Item 005. 3	IPE 300_	S235_
rigid 33	starr	S235_
rigid 34	starr	S235_
rigid 35	starr	S235_
rigid 36	starr	S235_
rigid 37	starr	S235_
rigid 38	starr	S235_
rigid 39	starr	S235_
rigid 40	starr	S235_
rigid 41	starr	S235_
rigid 42	starr	S235_
rigid 43	starr	S235_
rigid 44	starr	S235_
rigid 45	starr	S235_
rigid 46	starr	S235_
rigid 47	starr	S235_
rigid 81	starr	S235_
rigid 82	starr	S235_
rope		
Item 020. 1	starr	S235_
Item 020. 2	starr	S235_
top pulley		
rigid 50	starr	S235_
rigid 51	starr	S235_
trolley		
Item 019. 1	IPE 300_	S235_
Item 019. 2	IPE 300_	S235_
Item 019. 3	IPE 300_	S235_
Item 019. 4	IPE 300_	S235_
Item 019. 5	IPE 300_	S235_
Item 019. 6	IPE 300_	S235_
Item 019. 7	IPE 300_	S235_
Item 019. 8	IPE 300_	S235_
Item 019. 9	IPE 300_	S235_
Item 019. 10	IPE 300_	S235_
Item 019. 11	IPE 300_	S235_
rigid 52	starr	S235_

subsystem name beam name	cross section	material
rigid 53	starr	S235_
rigid 54	starr	S235_
rigid 55	starr	S235_
rigid 56	starr	S235_
rigid 57	starr	S235_
upper crane		
Item 006. 1	HE B 800_	S235_
Item 006. 2	HE B 800_	S235_
Item 006. 3	HE B 800_	S235_
Item 006. 4	HE B 800_	S235_
Item 006. 5	HE B 800_	S235_
Item 006. 6	HE B 800_	S235_
Item 006. 7	HE B 800_	S235_
Item 006. 8	HE B 800_	S235_
Item 006. 9	HE B 800_	S235_
Item 006. 10	HE B 800_	S235_
Item 006. 11	HE B 800_	S235_
Item 006. 12	HE B 800_	S235_
Item 006. 13	HE B 800_	S235_
Item 006. 14	HE B 800_	S235_
Item 006. 15	HE B 800_	S235_
Item 006. 16	HE B 800_	S235_
Item 006. 17	HE B 800_	S235_
Item 006. 18	HE B 800_	S235_
Item 006. 19	HE B 800_	S235_
Item 006. 20	HE B 800_	S235_
Item 006. 21	HE B 800_	S235_
Item 006. 22	HE B 800_	S235_
Item 007. 1	HE B 500_	S235_
Item 007. 2	HE B 500_	S235_
Item 007. 3	HE B 500_	S235_
Item 007. 4	HE B 500_	S235_
Item 007. 5	HE B 500_	S235_
Item 007. 6	HE B 500_	S235_
Item 008. 1	RR 800x300x20.	S235_
Item 008. 2	RR 800x300x20.	S235_
Item 008. 3	RR 800x300x20.	S235_
Item 009. 1	RR_800x300x20.	S235_
	RR 300x300x20.	
Item 009. 2	RR_800x300x20.	S235_
	RR 300x300x20.	
Item 010. 1	HE B 200_	S235_
Item 010. 2	HE B 200_	S235_
Item 010. 3	HE B 200_	S235_
Item 011. 1	RR 300x300x20.	S235_
Item 011. 2	RR 300x300x20.	S235_
Item 011. 3	RR 300x300x20.	S235_
rigid 58	starr	S235_
rigid 59	starr	S235_
rigid 60	starr	S235_
rigid 61	starr	S235_
rigid 62	starr	S235_
rigid 63	starr	S235_
rigid 64	starr	S235_
rigid 65	starr	S235_
rigid 66	starr	S235_
rigid 67	starr	S235_
rigid 68	starr	S235_
rigid 69	starr	S235_
rigid 70	starr	S235_
rigid 71	starr	S235_
rigid 72	starr	S235_
rigid 73	starr	S235_

subsystem name beam name	cross section	material
rigid 74	starr	S235_
rigid 75	starr	S235_
rigid 76	starr	S235_
rigid 77	starr	S235_
rigid 78	starr	S235_
rigid 79	starr	S235_
rigid 80	starr	S235_
rigid 83	starr	S235_
rigid 84	starr	S235_
rigid 85	starr	S235_
rigid 86	starr	S235_
rigid 87	starr	S235_
rigid 88	starr	S235_
rigid 89	starr	S235_
rigid 90	starr	S235_

beam vector components, total length:

subsystem name beam name	components of beam length lx	ly	lz	beam length
boom				
Item 012. 50	200.0	.0	.0	200.0
Item 012. 51	.0	1000.0	-900.0	1345.362
Item 012. 52	.0	1000.0	-900.0	1345.362
Item 012. 53	.0	2000.0	.0	2000.0
Item 012. 54	.0	2000.0	.0	2000.0
Item 012. 55	.0	1000.0	-900.0	1345.362
Item 012. 56	.0	1000.0	-900.0	1345.362
Item 012. 57	1000.0	.0	.0	1000.0
Item 012. 58	200.0	.0	.0	200.0
Item 013. 49	200.0	.0	.0	200.0
Item 013. 50	200.0	.0	.0	200.0
Item 013. 51	200.0	.0	.0	200.0
Item 013. 52	-200.0	.0	.0	200.0
Item 013. 53	200.0	.0	.0	200.0
Item 013. 54	-200.0	.0	.0	200.0
Item 013. 55	200.0	.0	.0	200.0
Item 013. 56	-200.0	.0	.0	200.0
Item 013. 57	200.0	.0	.0	200.0
Item 013. 58	-200.0	.0	.0	200.0
Item 013. 59	200.0	.0	.0	200.0
Item 013. 60	200.0	.0	.0	200.0
Item 013. 61	200.0	.0	.0	200.0
Item 013. 62	200.0	.0	.0	200.0
Item 013. 63	.0	2000.0	.0	2000.0
Item 013. 64	.0	2000.0	.0	2000.0
Item 013. 65	.0	2000.0	.0	2000.0
Item 013. 66	.0	2000.0	.0	2000.0
Item 013. 67	.0	2000.0	.0	2000.0
Item 013. 68	.0	2000.0	.0	2000.0
Item 013. 69	.0	2000.0	.0	2000.0
Item 013. 70	.0	2000.0	.0	2000.0
Item 013. 71	.0	2000.0	.0	2000.0
Item 013. 72	.0	2000.0	.0	2000.0
Item 013. 73	.0	2000.0	.0	2000.0
Item 013. 74	.0	2000.0	.0	2000.0
Item 013. 75	.0	2000.0	.0	2000.0
Item 013. 76	.0	2000.0	.0	2000.0
Item 013. 77	.0	2000.0	.0	2000.0
Item 013. 78	.0	2000.0	.0	2000.0
Item 013. 79	.0	2000.0	.0	2000.0

subsystem name beam name	components of beam length lx	 ly	 lz	beam length
Item 013. 80	.0	2000.0	.0	2000.0
Item 013. 81	.0	2000.0	.0	2000.0
Item 013. 82	.0	2000.0	.0	2000.0
Item 013. 83	.0	2000.0	.0	2000.0
Item 013. 84	.0	2000.0	.0	2000.0
Item 013. 85	.0	2000.0	.0	2000.0
Item 013. 86	.0	2000.0	.0	2000.0
Item 013. 87	.0	2000.0	.0	2000.0
Item 013. 88	.0	2000.0	.0	2000.0
Item 013. 89	.0	2000.0	.0	2000.0
Item 013. 90	.0	2000.0	.0	2000.0
Item 013. 91	.0	2000.0	.0	2000.0
Item 013. 92	.0	2000.0	.0	2000.0
Item 013. 93	200.0	.0	.0	200.0
Item 013. 94	.0	2000.0	.0	2000.0
Item 013. 95	.0	2000.0	.0	2000.0
Item 013. 96	.0	2000.0	1800.0	2690.725
Item 013. 97	.0	2000.0	.0	2000.0
Item 013. 98	.0	2000.0	1800.0	2690.725
Item 013. 99	.0	2000.0	.0	2000.0
Item 013. 100	200.0	.0	.0	200.0
Item 013. 101	1000.0	.0	.0	1000.0
Item 013. 102	1000.0	.0	.0	1000.0
Item 013. 103	1000.0	.0	.0	1000.0
Item 013. 104	1000.0	.0	.0	1000.0
Item 013. 105	1000.0	.0	.0	1000.0
Item 013. 106	200.0	.0	.0	200.0
Item 013. 107	200.0	.0	.0	200.0
Item 014. 1	.0	.0	900.0	900.0
Item 014. 2	.0	.0	900.0	900.0
Item 014. 3	.0	.0	900.0	900.0
Item 014. 4	.0	.0	900.0	900.0
Item 014. 5	.0	.0	900.0	900.0
Item 014. 6	.0	.0	900.0	900.0
Item 014. 7	.0	.0	900.0	900.0
Item 014. 8	.0	.0	900.0	900.0
Item 014. 9	.0	.0	900.0	900.0
Item 014. 10	.0	.0	900.0	900.0
Item 014. 11	.0	.0	900.0	900.0
Item 014. 12	.0	.0	900.0	900.0
Item 014. 13	.0	.0	900.0	900.0
Item 014. 14	.0	.0	900.0	900.0
Item 014. 15	.0	.0	900.0	900.0
Item 014. 16	.0	.0	900.0	900.0
Item 015. 12	.0	.0	1800.0	1800.0
Item 015. 13	.0	.0	1800.0	1800.0
Item 015. 14	.0	.0	1800.0	1800.0
Item 015. 15	.0	.0	1800.0	1800.0
Item 015. 16	.0	2000.0	-1800.0	2690.725
Item 015. 17	.0	2000.0	1800.0	2690.725
Item 015. 18	.0	2000.0	-1800.0	2690.725
Item 015. 19	.0	2000.0	1800.0	2690.725
Item 015. 20	.0	2000.0	-1800.0	2690.725
Item 015. 21	.0	2000.0	1800.0	2690.725
Item 015. 22	.0	2000.0	-1800.0	2690.725
Item 015. 23	.0	2000.0	1800.0	2690.725
Item 015. 24	.0	2000.0	-1800.0	2690.725
Item 015. 25	.0	2000.0	1800.0	2690.725
Item 015. 26	.0	2000.0	-1800.0	2690.725
Item 015. 27	.0	2000.0	1800.0	2690.725
Item 015. 28	1400.0	2000.0	.0	2441.311
Item 015. 29	-1400.0	2000.0	.0	2441.311
Item 015. 30	1400.0	2000.0	.0	2441.311

subsystem name beam name	components of beam length lx	ly	lz	beam length
Item 015. 31	-1400.0	2000.0	.0	2441.311
Item 015. 32	1400.0	2000.0	.0	2441.311
Item 015. 33	-1400.0	2000.0	.0	2441.311
Item 015. 34	-1400.0	2000.0	.0	2441.311
Item 015. 35	-1400.0	2000.0	.0	2441.311
Item 015. 36	-1400.0	2000.0	.0	2441.311
Item 015. 37	1400.0	.0	.0	1400.0
Item 015. 38	-1400.0	2000.0	.0	2441.311
Item 015. 39	.0	.0	1800.0	1800.0
Item 015. 40	.0	.0	1800.0	1800.0
Item 015. 41	1400.0	.0	.0	1400.0
Item 015. 42	1400.0	.0	.0	1400.0
Item 015. 43	.0	.0	1800.0	1800.0
Item 015. 44	.0	.0	1800.0	1800.0
Item 015. 45	-1400.0	2000.0	.0	2441.311
Item 015. 46	1400.0	2000.0	.0	2441.311
Item 015. 47	.0	2000.0	-1800.0	2690.725
Item 015. 48	.0	2000.0	-1800.0	2690.725
Item 015. 49	-1400.0	2000.0	.0	2441.311
Item 015. 50	1400.0	.0	.0	1400.0
Item 015. 51	1400.0	.0	.0	1400.0
Item 015. 52	1400.0	.0	.0	1400.0
Item 015. 53	1400.0	.0	.0	1400.0
Item 015. 54	1400.0	.0	.0	1400.0
Item 015. 55	1400.0	.0	.0	1400.0
Item 015. 56	1400.0	.0	.0	1400.0
Item 015. 57	.0	2000.0	1800.0	2690.725
Item 015. 58	.0	2000.0	1800.0	2690.725
Item 015. 59	.0	.0	1800.0	1800.0
Item 015. 60	.0	.0	1800.0	1800.0
Item 016. 11	.0	1000.0	.0	1000.0
Item 016. 12	.0	1000.0	.0	1000.0
Item 016. 13	.0	1000.0	.0	1000.0
Item 016. 14	.0	1000.0	.0	1000.0
Item 016. 15	.0	1000.0	.0	1000.0
Item 016. 16	.0	1000.0	.0	1000.0
Item 016. 17	.0	1000.0	.0	1000.0
Item 016. 18	.0	1000.0	.0	1000.0
Item 016. 19	.0	1000.0	.0	1000.0
Item 016. 20	.0	1000.0	.0	1000.0
Item 016. 21	.0	1500.0	.0	1500.0
Item 016. 22	.0	2000.0	.0	2000.0
Item 016. 23	.0	1000.0	.0	1000.0
Item 016. 24	.0	500.0	.0	500.0
Item 016. 25	.0	1500.0	.0	1500.0
Item 016. 26	.0	2000.0	.0	2000.0
Item 016. 27	.0	2000.0	.0	2000.0
Item 016. 28	.0	1000.0	.0	1000.0
Item 016. 29	.0	2000.0	.0	2000.0
Item 016. 30	.0	1500.0	.0	1500.0
Item 016. 31	.0	2000.0	.0	2000.0
Item 016. 32	.0	1000.0	.0	1000.0
Item 016. 33	.0	500.0	.0	500.0
Item 016. 34	.0	1500.0	.0	1500.0
Item 016. 35	.0	2000.0	.0	2000.0
Item 016. 36	.0	2000.0	.0	2000.0
Item 016. 37	.0	1000.0	.0	1000.0
Item 016. 38	.0	2000.0	.0	2000.0
Item 016. 39	.0	500.0	.0	500.0
Item 016. 40	.0	500.0	.0	500.0
Item 016. 41	.0	1000.0	.0	1000.0
Item 016. 42	.0	1000.0	.0	1000.0
Item 016. 43	.0	500.0	.0	500.0

subsystem name beam name	components of beam length lx	ly	lz	beam length
Item 016. 44	.0	500.0	.0	500.0
Item 016. 45	.0	1500.0	.0	1500.0
Item 016. 46	.0	1500.0	.0	1500.0
Item 016. 47	.0	1000.0	.0	1000.0
Item 016. 48	.0	1000.0	.0	1000.0
Item 016. 49	.0	1000.0	.0	1000.0
Item 016. 50	.0	1000.0	.0	1000.0
Item 016. 51	.0	1000.0	.0	1000.0
Item 016. 52	.0	1000.0	.0	1000.0
Item 016. 53	.0	1000.0	.0	1000.0
Item 016. 54	.0	1000.0	.0	1000.0
Item 016. 55	.0	1000.0	.0	1000.0
Item 016. 56	.0	1000.0	.0	1000.0
Item 016. 57	.0	1000.0	.0	1000.0
Item 016. 58	.0	1000.0	.0	1000.0
Item 017. 1	1000.0	.0	.0	1000.0
Item 017. 2	1000.0	.0	.0	1000.0
Item 017. 3	1000.0	.0	.0	1000.0
Item 017. 4	1000.0	.0	.0	1000.0
Item 017. 5	1000.0	.0	.0	1000.0
Item 017. 6	1000.0	.0	.0	1000.0
Item 017. 7	1000.0	.0	.0	1000.0
Item 017. 8	1000.0	.0	.0	1000.0
Item 017. 9	1000.0	.0	.0	1000.0
Item 017. 10	1000.0	.0	.0	1000.0
Item 017. 11	1000.0	.0	.0	1000.0
Item 018. 1	-1000.0	1000.0	.0	1414.214
Item 018. 2	1000.0	1000.0	.0	1414.214
Item 018. 3	-1000.0	1000.0	.0	1414.214
Item 018. 4	1000.0	1000.0	.0	1414.214
Item 018. 5	-1000.0	1000.0	.0	1414.214
Item 018. 6	1000.0	1000.0	.0	1414.214
Item 018. 7	-1000.0	1000.0	.0	1414.214
Item 018. 8	1000.0	1000.0	.0	1414.214
Item 018. 9	-1000.0	1000.0	.0	1414.214
Item 018. 10	1000.0	1000.0	.0	1414.214
rigid 1	.0	.0	400.0	400.0
rigid 2	.0	.0	400.0	400.0
rigid 3	.0	.0	100.0	100.0
rigid 4	.0	.0	100.0	100.0
rigid 5	.0	.0	100.0	100.0
rigid 6	.0	.0	100.0	100.0
rigid 7	.0	.0	100.0	100.0
rigid 8	.0	.0	100.0	100.0
rigid 9	.0	.0	100.0	100.0
rigid 10	.0	.0	100.0	100.0
rigid 11	.0	.0	100.0	100.0
rigid 12	.0	.0	100.0	100.0
rigid 13	.0	.0	100.0	100.0
rigid 14	.0	.0	100.0	100.0
rigid 15	.0	.0	100.0	100.0
rigid 16	.0	.0	100.0	100.0
rigid 17	.0	.0	100.0	100.0
rigid 18	.0	.0	100.0	100.0
rigid 19	.0	.0	100.0	100.0
rigid 20	.0	.0	100.0	100.0
rigid 21	.0	.0	100.0	100.0
rigid 22	.0	.0	100.0	100.0
rigid 23	-200.0	.0	.0	200.0
rigid 24	200.0	.0	.0	200.0
rigid 25	-200.0	.0	.0	200.0
rigid 26	200.0	.0	.0	200.0
rigid 27	-200.0	.0	.0	200.0

subsystem name beam name	components of beam length lx	 ly	 lz	beam length
rigid 28	200.0	.0	.0	200.0
rigid 29	-200.0	.0	.0	200.0
rigid 30	200.0	.0	.0	200.0
rigid 31	-200.0	.0	.0	200.0
rigid 32	200.0	.0	.0	200.0
portal				
Item 001. 41	-1000.0	-50.0	-3000.0	3162.673
Item 001. 42	1000.0	-50.0	-3000.0	3162.673
Item 001. 43	-1000.0	50.0	-3000.0	3162.673
Item 001. 44	1000.0	50.0	-3000.0	3162.673
Item 002. 1	2250.0	.0	.0	2250.0
Item 002. 2	1500.0	.0	.0	1500.0
Item 002. 3	2250.0	.0	.0	2250.0
Item 002. 4	1500.0	.0	.0	1500.0
Item 002. 11	2250.0	.0	.0	2250.0
Item 002. 12	2250.0	.0	.0	2250.0
Item 003. 1	.0	-2500.0	.0	2500.0
Item 003. 2	.0	-2150.0	.0	2150.0
Item 003. 3	.0	-1750.0	.0	1750.0
Item 003. 4	.0	-2500.0	.0	2500.0
Item 003. 5	.0	-2150.0	.0	2150.0
Item 003. 6	.0	-1750.0	.0	1750.0
Item 003. 7	310.6	.0	.0	310.6
Item 003. 8	310.6	.0	.0	310.6
Item 003. 9	310.6	.0	.0	310.6
Item 003. 10	310.6	.0	.0	310.6
Item 003. 11	.0	-310.6	.0	310.6
Item 003. 12	.0	-310.6	.0	310.6
Item 003. 13	.0	-310.6	.0	310.6
Item 003. 14	.0	-310.6	.0	310.6
Item 003. 15	.0	-1500.0	.0	1500.0
Item 003. 16	.0	-1500.0	.0	1500.0
Item 003. 17	.0	1750.0	.0	1750.0
Item 003. 18	.0	1750.0	.0	1750.0
Item 003. 19	.0	439.4	.0	439.4
Item 003. 20	.0	439.4	.0	439.4
Item 003. 21	2250.0	.0	.0	2250.0
Item 003. 22	2250.0	.0	.0	2250.0
Item 003. 23	439.4	.0	.0	439.4
Item 003. 24	439.4	.0	.0	439.4
Item 003. 25	.0	2500.0	.0	2500.0
Item 003. 26	.0	2500.0	.0	2500.0
Item 003. 27	.0	2150.0	.0	2150.0
Item 003. 28	.0	2150.0	.0	2150.0
Item 003. 29	.0	439.4	.0	439.4
Item 003. 30	.0	439.4	.0	439.4
Item 003. 31	2250.0	.0	.0	2250.0
Item 003. 32	2250.0	.0	.0	2250.0
Item 003. 33	439.4	.0	.0	439.4
Item 003. 34	439.4	.0	.0	439.4
Item 004. 1	439.4	-439.4	.0	621.405
Item 004. 2	439.4	439.4	.0	621.405
Item 004. 3	439.4	439.4	.0	621.405
Item 004. 4	439.4	-439.4	.0	621.405
Item 005. 1	2250.0	.0	.0	2250.0
Item 005. 2	1500.0	.0	.0	1500.0
Item 005. 3	2250.0	.0	.0	2250.0
rigid 33	.0	.0	250.0	250.0
rigid 34	.0	.0	250.0	250.0
rigid 35	750.0	-310.6	.0	811.771
rigid 36	310.6	-750.0	.0	811.771
rigid 37	-310.6	-750.0	.0	811.771
rigid 38	-750.0	-310.6	.0	811.771

subsystem name / beam name	components of beam length lx	ly	lz	beam length
rigid 39	-750.0	310.6	.0	811.771
rigid 40	-310.6	750.0	.0	811.771
rigid 41	310.6	750.0	.0	811.771
rigid 42	750.0	310.6	.0	811.771
rigid 43	.0	.0	-1000.0	1000.0
rigid 44	.0	.0	-1000.0	1000.0
rigid 45	.0	.0	-1000.0	1000.0
rigid 46	.0	.0	-1000.0	1000.0
rigid 47	.0	.0	1500.0	1500.0
rigid 81	.0	.0	250.0	250.0
rigid 82	.0	.0	250.0	250.0
rope				
Item 020. 1	.0	-11880.884	-9272.997	15071.293
Item 020. 2	.0	-11880.884	-9272.997	15071.293
top pulley				
rigid 50	.0	.0	600.0	600.0
rigid 51	.0	.0	600.0	600.0
trolley				
Item 019. 1	.0	1500.0	.0	1500.0
Item 019. 2	.0	1500.0	.0	1500.0
Item 019. 3	.0	499.99	.0	499.99
Item 019. 4	.0	499.998	.0	499.998
Item 019. 5	.0	5000.01	.0	5000.01
Item 019. 6	.0	5000.002	.0	5000.002
Item 019. 7	1000.0	.0	.0	1000.0
Item 019. 8	1000.0	.0	.0	1000.0
Item 019. 9	1000.0	.0	.0	1000.0
Item 019. 10	.0	3000.0	.0	3000.0
Item 019. 11	.0	3000.0	.0	3000.0
rigid 52	.0	.0	300.0	300.0
rigid 53	.0	.0	300.0	300.0
rigid 54	.0	.0	300.0	300.0
rigid 55	.0	.0	300.0	300.0
rigid 56	.0	.0	300.0	300.0
rigid 57	.0	.0	300.0	300.0
upper crane				
Item 006. 1	.0	-2000.0	.0	2000.0
Item 006. 2	.0	-414.1	.0	414.1
Item 006. 3	.0	-2000.0	.0	2000.0
Item 006. 4	.0	-414.1	.0	414.1
Item 006. 5	.0	-585.9	.0	585.9
Item 006. 6	.0	-585.9	.0	585.9
Item 006. 7	.0	-1000.0	.0	1000.0
Item 006. 8	.0	-1000.0	.0	1000.0
Item 006. 9	585.9	.0	.0	585.9
Item 006. 10	585.9	.0	.0	585.9
Item 006. 11	828.2	.0	.0	828.2
Item 006. 12	828.2	.0	.0	828.2
Item 006. 13	585.9	.0	.0	585.9
Item 006. 14	585.9	.0	.0	585.9
Item 006. 15	.0	-414.1	.0	414.1
Item 006. 16	.0	-414.1	.0	414.1
Item 006. 17	.0	-585.9	.0	585.9
Item 006. 18	.0	-585.9	.0	585.9
Item 006. 19	585.9	585.9	.0	828.588
Item 006. 20	585.9	-585.9	.0	828.588
Item 006. 21	-585.9	-585.9	.0	828.588
Item 006. 22	-585.9	585.9	.0	828.588
Item 007. 1	2000.0	.0	.0	2000.0
Item 007. 2	2000.0	.0	.0	2000.0
Item 007. 3	-.04	-6000.0	.0	6000.0
Item 007. 4	-.04	-6000.0	.0	6000.0
Item 007. 5	.0	-5600.0	.0	5600.0

subsystem name beam name	components of beam length lx	ly	lz	beam length
Item 007. 6	.0	-5600.0	.0	5600.0
Item 008. 1	2000.0	.0	.0	2000.0
Item 008. 2	.0	.0	3500.0	3500.0
Item 008. 3	.0	.0	3500.0	3500.0
Item 009. 1	.0	250.0	8000.0	8003.905
Item 009. 2	.0	250.0	8000.0	8003.905
Item 010. 1	2000.0	.0	.0	2000.0
Item 010. 2	-.04	-11750.0	8000.0	14214.869
Item 010. 3	-.04	-11750.0	8000.0	14214.869
Item 011. 1	300.0	.0	.0	300.0
Item 011. 2	300.0	.0	.0	300.0
Item 011. 3	1400.0	.0	.0	1400.0
rigid 58	.0	.0	2000.0	2000.0
rigid 59	300.0	.0	.0	300.0
rigid 60	300.0	.0	.0	300.0
rigid 61	.0	.0	500.0	500.0
rigid 62	.0	.0	500.0	500.0
rigid 63	300.0	.0	.0	300.0
rigid 64	1400.0	.0	.0	1400.0
rigid 65	300.0	.0	.0	300.0
rigid 66	8.02E-03	2000.0	.0	2000.0
rigid 67	8.02E-03	2000.0	.0	2000.0
rigid 68	2000.0	.0	.0	2000.0
rigid 69	2000.0	.0	.0	2000.0
rigid 70	2000.0	.0	.0	2000.0
rigid 71	.0	-400.0	.0	400.0
rigid 72	.0	-400.0	.0	400.0
rigid 73	8.021E-03	2000.0	.0	2000.0
rigid 74	8.02E-03	2000.0	.0	2000.0
rigid 75	3.908E-03	487.207	350.184	600.0
rigid 76	3.908E-03	487.212	350.193	600.009
rigid 77	-.033	5750.025	-7999.944	9852.0
rigid 78	-.033	5750.025	-7999.944	9852.0
rigid 79	-.029	487.233	350.24	600.053
rigid 80	-.029	487.237	350.249	600.062
rigid 83	1000.0	414.1	.0	1082.349
rigid 84	414.1	1000.0	.0	1082.349
rigid 85	-414.1	1000.0	.0	1082.349
rigid 86	-1000.0	414.1	.0	1082.349
rigid 87	-1000.0	-414.1	.0	1082.349
rigid 88	-414.1	-1000.0	.0	1082.349
rigid 89	414.1	-1000.0	.0	1082.349
rigid 90	1000.0	-414.1	.0	1082.349

auxiliary vector:

subsystem name beam name	auxiliary vector components ax	ay	az
boom			
Item 012. 50	.0	.0	1.0
Item 012. 51	1.0	.0	.0
Item 012. 52	1.0	.0	.0
Item 012. 53	1.0	.0	.0
Item 012. 54	1.0	.0	.0
Item 012. 55	1.0	.0	.0
Item 012. 56	1.0	.0	.0
Item 012. 57	.0	.0	1.0
Item 012. 58	.0	.0	1.0
Item 013. 49	.0	.0	1.0
Item 013. 50	.0	.0	1.0
Item 013. 51	.0	.0	1.0

subsystem name beam name	auxiliary vector components ax	ay	az
Item 013. 52	.0	.0	1.0
Item 013. 53	.0	.0	1.0
Item 013. 54	.0	.0	1.0
Item 013. 55	.0	.0	1.0
Item 013. 56	.0	.0	1.0
Item 013. 57	.0	.0	1.0
Item 013. 58	.0	.0	1.0
Item 013. 59	.0	.0	1.0
Item 013. 60	.0	.0	1.0
Item 013. 61	.0	.0	1.0
Item 013. 62	.0	.0	1.0
Item 013. 63	1.0	.0	.0
Item 013. 64	1.0	.0	.0
Item 013. 65	1.0	.0	.0
Item 013. 66	1.0	.0	.0
Item 013. 67	1.0	.0	.0
Item 013. 68	1.0	.0	.0
Item 013. 69	1.0	.0	.0
Item 013. 70	1.0	.0	.0
Item 013. 71	1.0	.0	.0
Item 013. 72	1.0	.0	.0
Item 013. 73	1.0	.0	.0
Item 013. 74	1.0	.0	.0
Item 013. 75	1.0	.0	.0
Item 013. 76	1.0	.0	.0
Item 013. 77	1.0	.0	.0
Item 013. 78	1.0	.0	.0
Item 013. 79	1.0	.0	.0
Item 013. 80	1.0	.0	.0
Item 013. 81	1.0	.0	.0
Item 013. 82	1.0	.0	.0
Item 013. 83	1.0	.0	.0
Item 013. 84	1.0	.0	.0
Item 013. 85	1.0	.0	.0
Item 013. 86	1.0	.0	.0
Item 013. 87	1.0	.0	.0
Item 013. 88	1.0	.0	.0
Item 013. 89	1.0	.0	.0
Item 013. 90	1.0	.0	.0
Item 013. 91	1.0	.0	.0
Item 013. 92	1.0	.0	.0
Item 013. 93	.0	.0	1.0
Item 013. 94	1.0	.0	.0
Item 013. 95	1.0	.0	.0
Item 013. 96	1.0	.0	.0
Item 013. 97	1.0	.0	.0
Item 013. 98	1.0	.0	.0
Item 013. 99	1.0	.0	.0
Item 013. 100	.0	.0	1.0
Item 013. 101	.0	.0	1.0
Item 013. 102	.0	.0	1.0
Item 013. 103	.0	.0	1.0
Item 013. 104	.0	.0	1.0
Item 013. 105	.0	.0	1.0
Item 013. 106	.0	.0	1.0
Item 013. 107	.0	.0	1.0
Item 014. 1	1.0	.0	.0
Item 014. 2	1.0	.0	.0
Item 014. 3	1.0	.0	.0
Item 014. 4	1.0	.0	.0
Item 014. 5	1.0	.0	.0
Item 014. 6	1.0	.0	.0
Item 014. 7	1.0	.0	.0

subsystem name beam name	auxiliary vector components ax	ay	az
Item 014. 8	1.0	.0	.0
Item 014. 9	1.0	.0	.0
Item 014. 10	1.0	.0	.0
Item 014. 11	1.0	.0	.0
Item 014. 12	1.0	.0	.0
Item 014. 13	1.0	.0	.0
Item 014. 14	1.0	.0	.0
Item 014. 15	1.0	.0	.0
Item 014. 16	1.0	.0	.0
Item 015. 12	1.0	.0	.0
Item 015. 13	1.0	.0	.0
Item 015. 14	1.0	.0	.0
Item 015. 15	1.0	.0	.0
Item 015. 16	1.0	.0	.0
Item 015. 17	1.0	.0	.0
Item 015. 18	1.0	.0	.0
Item 015. 19	1.0	.0	.0
Item 015. 20	1.0	.0	.0
Item 015. 21	1.0	.0	.0
Item 015. 22	1.0	.0	.0
Item 015. 23	1.0	.0	.0
Item 015. 24	1.0	.0	.0
Item 015. 25	1.0	.0	.0
Item 015. 26	1.0	.0	.0
Item 015. 27	1.0	.0	.0
Item 015. 28	.0	.0	1.0
Item 015. 29	.0	.0	1.0
Item 015. 30	.0	.0	1.0
Item 015. 31	.0	.0	1.0
Item 015. 32	.0	.0	1.0
Item 015. 33	.0	.0	1.0
Item 015. 34	.0	.0	1.0
Item 015. 35	.0	.0	1.0
Item 015. 36	.0	.0	1.0
Item 015. 37	.0	.0	1.0
Item 015. 38	.0	.0	1.0
Item 015. 39	1.0	.0	.0
Item 015. 40	1.0	.0	.0
Item 015. 41	.0	.0	1.0
Item 015. 42	.0	.0	1.0
Item 015. 43	1.0	.0	.0
Item 015. 44	1.0	.0	.0
Item 015. 45	.0	.0	1.0
Item 015. 46	.0	.0	1.0
Item 015. 47	1.0	.0	.0
Item 015. 48	1.0	.0	.0
Item 015. 49	.0	.0	1.0
Item 015. 50	.0	.0	1.0
Item 015. 51	.0	.0	1.0
Item 015. 52	.0	.0	1.0
Item 015. 53	.0	.0	1.0
Item 015. 54	.0	.0	1.0
Item 015. 55	.0	.0	1.0
Item 015. 56	.0	.0	1.0
Item 015. 57	1.0	.0	.0
Item 015. 58	1.0	.0	.0
Item 015. 59	1.0	.0	.0
Item 015. 60	1.0	.0	.0
Item 016. 11	1.0	.0	.0
Item 016. 12	1.0	.0	.0
Item 016. 13	1.0	.0	.0
Item 016. 14	1.0	.0	.0
Item 016. 15	1.0	.0	.0

subsystem name beam name	auxiliary vector components ax	ay	az
Item 016. 16	1.0	.0	.0
Item 016. 17	1.0	.0	.0
Item 016. 18	1.0	.0	.0
Item 016. 19	1.0	.0	.0
Item 016. 20	1.0	.0	.0
Item 016. 21	1.0	.0	.0
Item 016. 22	1.0	.0	.0
Item 016. 23	1.0	.0	.0
Item 016. 24	1.0	.0	.0
Item 016. 25	1.0	.0	.0
Item 016. 26	1.0	.0	.0
Item 016. 27	1.0	.0	.0
Item 016. 28	1.0	.0	.0
Item 016. 29	1.0	.0	.0
Item 016. 30	1.0	.0	.0
Item 016. 31	1.0	.0	.0
Item 016. 32	1.0	.0	.0
Item 016. 33	1.0	.0	.0
Item 016. 34	1.0	.0	.0
Item 016. 35	1.0	.0	.0
Item 016. 36	1.0	.0	.0
Item 016. 37	1.0	.0	.0
Item 016. 38	1.0	.0	.0
Item 016. 39	1.0	.0	.0
Item 016. 40	1.0	.0	.0
Item 016. 41	1.0	.0	.0
Item 016. 42	1.0	.0	.0
Item 016. 43	1.0	.0	.0
Item 016. 44	1.0	.0	.0
Item 016. 45	1.0	.0	.0
Item 016. 46	1.0	.0	.0
Item 016. 47	1.0	.0	.0
Item 016. 48	1.0	.0	.0
Item 016. 49	1.0	.0	.0
Item 016. 50	1.0	.0	.0
Item 016. 51	1.0	.0	.0
Item 016. 52	1.0	.0	.0
Item 016. 53	1.0	.0	.0
Item 016. 54	1.0	.0	.0
Item 016. 55	1.0	.0	.0
Item 016. 56	1.0	.0	.0
Item 016. 57	1.0	.0	.0
Item 016. 58	1.0	.0	.0
Item 017. 1	.0	1.0	.0
Item 017. 2	.0	1.0	.0
Item 017. 3	.0	1.0	.0
Item 017. 4	.0	1.0	.0
Item 017. 5	.0	1.0	.0
Item 017. 6	.0	1.0	.0
Item 017. 7	.0	1.0	.0
Item 017. 8	.0	1.0	.0
Item 017. 9	.0	1.0	.0
Item 017. 10	.0	1.0	.0
Item 017. 11	.0	1.0	.0
Item 018. 1	.0	.0	1.0
Item 018. 2	.0	.0	1.0
Item 018. 3	.0	.0	1.0
Item 018. 4	.0	.0	1.0
Item 018. 5	.0	.0	1.0
Item 018. 6	.0	.0	1.0
Item 018. 7	.0	.0	1.0
Item 018. 8	.0	.0	1.0
Item 018. 9	.0	.0	1.0

subsystem name / beam name	auxiliary vector components ax	ay	az
Item 018. 10	.0	.0	1.0
rigid 1	1.0	.0	.0
rigid 2	1.0	.0	.0
rigid 3	.0	1.0	.0
rigid 4	.0	1.0	.0
rigid 5	.0	1.0	.0
rigid 6	.0	1.0	.0
rigid 7	.0	1.0	.0
rigid 8	.0	1.0	.0
rigid 9	.0	1.0	.0
rigid 10	.0	1.0	.0
rigid 11	.0	1.0	.0
rigid 12	.0	1.0	.0
rigid 13	.0	1.0	.0
rigid 14	.0	1.0	.0
rigid 15	.0	1.0	.0
rigid 16	.0	1.0	.0
rigid 17	.0	1.0	.0
rigid 18	.0	1.0	.0
rigid 19	.0	1.0	.0
rigid 20	.0	1.0	.0
rigid 21	.0	1.0	.0
rigid 22	.0	1.0	.0
rigid 23	.0	1.0	.0
rigid 24	.0	1.0	.0
rigid 25	.0	1.0	.0
rigid 26	.0	1.0	.0
rigid 27	.0	1.0	.0
rigid 28	.0	1.0	.0
rigid 29	.0	1.0	.0
rigid 30	.0	1.0	.0
rigid 31	.0	1.0	.0
rigid 32	.0	1.0	.0
portal			
Item 001. 41	.0	1.0	.0
Item 001. 42	.0	1.0	.0
Item 001. 43	.0	1.0	.0
Item 001. 44	.0	1.0	.0
Item 002. 1	.0	1.0	.0
Item 002. 2	.0	1.0	.0
Item 002. 3	.0	1.0	.0
Item 002. 4	.0	1.0	.0
Item 002. 11	.0	1.0	.0
Item 002. 12	.0	1.0	.0
Item 003. 1	1.0	.0	.0
Item 003. 2	1.0	.0	.0
Item 003. 3	1.0	.0	.0
Item 003. 4	1.0	.0	.0
Item 003. 5	1.0	.0	.0
Item 003. 6	1.0	.0	.0
Item 003. 7	.0	1.0	.0
Item 003. 8	.0	1.0	.0
Item 003. 9	.0	1.0	.0
Item 003. 10	.0	1.0	.0
Item 003. 11	1.0	.0	.0
Item 003. 12	1.0	.0	.0
Item 003. 13	1.0	.0	.0
Item 003. 14	1.0	.0	.0
Item 003. 15	1.0	.0	.0
Item 003. 16	1.0	.0	.0
Item 003. 17	1.0	.0	.0
Item 003. 18	1.0	.0	.0
Item 003. 19	1.0	.0	.0

subsystem name / beam name	auxiliary vector components ax	ay	az
Item 003. 20	1.0	.0	.0
Item 003. 21	.0	1.0	.0
Item 003. 22	.0	1.0	.0
Item 003. 23	.0	1.0	.0
Item 003. 24	.0	1.0	.0
Item 003. 25	1.0	.0	.0
Item 003. 26	1.0	.0	.0
Item 003. 27	1.0	.0	.0
Item 003. 28	1.0	.0	.0
Item 003. 29	1.0	.0	.0
Item 003. 30	1.0	.0	.0
Item 003. 31	.0	1.0	.0
Item 003. 32	.0	1.0	.0
Item 003. 33	.0	1.0	.0
Item 003. 34	.0	1.0	.0
Item 004. 1	.0	1.0	.0
Item 004. 2	.0	1.0	.0
Item 004. 3	.0	1.0	.0
Item 004. 4	.0	1.0	.0
Item 005. 1	.0	1.0	.0
Item 005. 2	.0	1.0	.0
Item 005. 3	.0	1.0	.0
rigid 33	.0	1.0	.0
rigid 34	.0	1.0	.0
rigid 35	.0	.0	1.0
rigid 36	.0	.0	1.0
rigid 37	.0	.0	1.0
rigid 38	.0	.0	1.0
rigid 39	.0	.0	1.0
rigid 40	.0	.0	1.0
rigid 41	.0	.0	1.0
rigid 42	.0	.0	1.0
rigid 43	.0	1.0	.0
rigid 44	.0	1.0	.0
rigid 45	.0	1.0	.0
rigid 46	.0	1.0	.0
rigid 47	.0	1.0	.0
rigid 81	.0	1.0	.0
rigid 82	.0	1.0	.0
rope			
Item 020. 1	1.0	.0	.0
Item 020. 2	1.0	.0	.0
top pulley			
rigid 50	1.0	.0	.0
rigid 51	1.0	.0	.0
trolley			
Item 019. 1	1.0	.0	.0
Item 019. 2	1.0	.0	.0
Item 019. 3	1.0	.0	.0
Item 019. 4	1.0	.0	.0
Item 019. 5	1.0	.0	.0
Item 019. 6	1.0	.0	.0
Item 019. 7	.0	1.0	.0
Item 019. 8	.0	1.0	.0
Item 019. 9	.0	1.0	.0
Item 019. 10	1.0	.0	.0
Item 019. 11	1.0	.0	.0
rigid 52	.0	1.0	.0
rigid 53	.0	1.0	.0
rigid 54	.0	1.0	.0
rigid 55	.0	1.0	.0
rigid 56	.0	1.0	.0
rigid 57	.0	1.0	.0

subsystem name / beam name	auxiliary vector components ax	ay	az
upper crane			
Item 006. 1	1.0	.0	.0
Item 006. 2	1.0	.0	.0
Item 006. 3	1.0	.0	.0
Item 006. 4	1.0	.0	.0
Item 006. 5	1.0	.0	.0
Item 006. 6	1.0	.0	.0
Item 006. 7	1.0	.0	.0
Item 006. 8	1.0	.0	.0
Item 006. 9	.0	1.0	.0
Item 006. 10	.0	1.0	.0
Item 006. 11	.0	1.0	.0
Item 006. 12	.0	1.0	.0
Item 006. 13	.0	1.0	.0
Item 006. 14	.0	1.0	.0
Item 006. 15	1.0	.0	.0
Item 006. 16	1.0	.0	.0
Item 006. 17	1.0	.0	.0
Item 006. 18	1.0	.0	.0
Item 006. 19	1.0	.0	.0
Item 006. 20	1.0	.0	.0
Item 006. 21	1.0	.0	.0
Item 006. 22	1.0	.0	.0
Item 007. 1	.0	1.0	.0
Item 007. 2	.0	1.0	.0
Item 007. 3	1.0	.0	.0
Item 007. 4	1.0	.0	.0
Item 007. 5	1.0	.0	.0
Item 007. 6	1.0	.0	.0
Item 008. 1	.0	.0	1.0
Item 008. 2	1.0	.0	.0
Item 008. 3	1.0	.0	.0
Item 009. 1	1.0	.0	.0
Item 009. 2	1.0	.0	.0
Item 010. 1	.0	1.0	.0
Item 010. 2	1.0	-2.320418E-06	1.604385E-06
Item 010. 3	1.0	-2.320418E-06	1.604383E-06
Item 011. 1	.0	1.0	.0
Item 011. 2	.0	1.0	.0
Item 011. 3	.0	1.0	.0
rigid 58	.0	1.0	.0
rigid 59	.0	1.0	.0
rigid 60	.0	1.0	.0
rigid 61	1.0	.0	.0
rigid 62	1.0	.0	.0
rigid 63	.0	1.0	.0
rigid 64	.0	1.0	.0
rigid 65	.0	1.0	.0
rigid 66	1.0	.0	.0
rigid 67	1.0	.0	.0
rigid 68	.0	1.0	.0
rigid 69	.0	1.0	.0
rigid 70	.0	1.0	.0
rigid 71	1.0	.0	.0
rigid 72	1.0	.0	.0
rigid 73	1.0	.0	.0
rigid 74	1.0	.0	.0
rigid 75	1.0	-3.338966E-06	-6.512668E-06
rigid 76	1.0	-3.339005E-06	-6.512507E-06
rigid 77	1.0	-4.299802E-06	-7.104916E-06
rigid 78	1.0	-4.299802E-06	-7.104916E-06
rigid 79	1.0	-3.339204E-06	-6.512338E-06
rigid 80	1.0	-3.339204E-06	-6.512338E-06

subsystem name beam name	auxiliary vector components ax	ay	az
rigid 83	.0	.0	1.0
rigid 84	.0	.0	1.0
rigid 85	.0	.0	1.0
rigid 86	.0	.0	1.0
rigid 87	.0	.0	1.0
rigid 88	.0	.0	1.0
rigid 89	.0	.0	1.0
rigid 90	.0	.0	1.0

beam joints:
---

subsystem name beam name	beam start x y z xx yy zz	beam end x y z xx yy zz
portal		
Item 005. 1	-- -- -- GG GG GG	-- -- -- -- GG GG
Item 005. 2	-- -- -- GG GG GG	-- -- -- -- GG GG
Item 005. 3	-- -- -- GG GG GG	-- -- -- -- GG GG
rigid 35	-- -- -- -- GG GG	-- -- -- -- GG --
rigid 36	-- -- -- -- GG GG	-- -- -- -- GG --
rigid 37	-- -- -- -- GG GG	-- -- -- -- -- --
rigid 38	-- -- -- -- GG GG	-- -- -- -- GG --
rigid 39	-- -- -- -- GG GG	-- -- -- -- GG --
rigid 40	-- -- -- -- GG GG	-- -- -- -- GG --
rigid 41	-- -- -- -- GG GG	-- -- -- -- GG --
rigid 42	-- -- -- -- GG GG	-- -- -- -- GG --
rigid 43	-- -- -- -- GG --	-- -- -- -- -- --
rigid 44	-- -- -- -- GG --	-- -- -- -- -- --
rigid 45	-- -- -- -- GG --	-- -- -- -- -- --
rigid 46	-- -- -- -- GG --	-- -- -- -- -- --
rope		
Item 020. 1	-- -- -- GG GG GG	-- -- -- -- GG GG
Item 020. 2	-- -- -- GG GG GG	-- -- -- -- GG GG
trolley		
rigid 52	-- GG -- GG GG GG	-- -- -- -- -- --
rigid 53	-- GG -- GG GG GG	-- -- -- -- -- --
rigid 54	-- GG -- GG GG GG	-- -- -- -- -- --
rigid 55	-- GG -- GG GG GG	-- -- -- -- -- --
rigid 56	-- -- -- GG GG GG	-- -- -- -- -- --
rigid 57	-- -- -- GG GG GG	-- -- -- -- -- --
upper crane		
Item 007. 5	-- -- -- -- -- --	-- -- -- GG GG GG
Item 007. 6	-- -- -- -- -- --	-- -- -- GG GG GG
Item 010. 2	-- -- -- GG GG GG	-- -- -- -- GG GG
Item 010. 3	-- -- -- GG GG GG	-- -- -- -- GG GG
rigid 61	-- -- -- -- -- --	-- -- -- -- GG --
rigid 62	-- -- -- -- -- --	-- -- -- -- GG --
rigid 77	-- -- -- GG GG GG	-- -- -- -- GG GG
rigid 78	-- -- -- GG GG GG	-- -- -- -- GG GG
rigid 83	-- -- -- -- GG GG	-- -- -- -- GG --
rigid 84	-- -- -- -- GG GG	-- -- -- -- GG --
rigid 85	-- -- -- -- GG GG	-- -- -- -- GG --
rigid 86	-- -- -- -- GG GG	-- -- -- -- GG --
rigid 87	-- -- -- -- GG GG	-- -- -- -- -- --
rigid 88	-- -- -- -- GG GG	-- -- -- -- GG --
rigid 89	-- -- -- -- GG GG	-- -- -- -- GG --
rigid 90	-- -- -- -- GG GG	-- -- -- -- GG --

```
beam mass factor and beam masses (permanent mass):
--------------------------------------------------

There are no beam mass factors unequal 1 !

There are no beam masses!
```


KRASTA® V9.7.0ß.4315 ©Kühne BSB GmbH, DE 64295 Darmstadt, +49(0)6151/397690-0
Lizenznehmer: Kühne BSB GmbH, Darmstadt

```
documentation of input data

output date: 27.03.2013 13:10:31

data file: ...elader\Großes Modell\KRASTA\00000 - MUSTER Schiffsbelader_V03

6 Subsystems
393 Beams
242 Nodes
24 Cross Sections
19 Load Cases
33 Mass Cases

units:
  mm  N  kg  sec  °C  °  -  .


output of Cross Sections
========================

cross section name
    areas and moments of inertia
    centre of gravity, centre of shear forces, principal axis angle
    input geometry of thin-walled cross sections

starr
direct input cross section
    Ax:     -1.0E-03   Ay:     -100.0     Az:     -100.0
    Ix:   -10000.0     Iy:   -10000.0     Iz:   -10000.0

DT 800x300x20x15
parametric cross section
    cross section type: H
    h:      800.0          b:      300.0          s:       15.0
    t:       20.0          r:       10.0
    Ax:    23485.841   Ay:    10000.0     Az:    11256.307
    Ix:  3265150.0     Iy:  2.38657E+09   Iz: 90222184.743
    centre of gravity:        ys:         .0       zs:         .0
    centre of shear forces:   ym:         .0       zm:         .0
    principal axis angle:    psi:         .0

RR 120x120x8.
parametric cross section
    cross section type: rectangular tube
    a:      120.0          b:      120.0          s:        8.0
    Ax:     3485.111   Ay:     1493.333   Az:     1493.333
    Ix: 11476476.839   Iy:  7197835.286   Iz:  7197835.286
    centre of gravity:        ys:         .0       zs:         .0
    centre of shear forces:   ym:         .0       zm:         .0
    principal axis angle:    psi:         .0

RR 200x200x10.
parametric cross section
    cross section type: rectangular tube
    a:      200.0          b:      200.0          s:       10.0
    Ax:     7342.478   Ay:     3166.667   Az:     3166.667
    Ix: 70238004.781   Iy: 43376334.286   Iz: 43376334.286
    centre of gravity:        ys:         .0       zs:         .0
    centre of shear forces:   ym:         .0       zm:         .0
    principal axis angle:    psi:         .0

RR 40x40x4.
parametric cross section
    cross section type: rectangular tube
    a:       40.0          b:       40.0          s:        4.0
    Ax:      562.265   Ay:      240.0     Az:      240.0
```

```
    Ix:   190170.985   Iy:   120930.359   Iz:   120930.359
    centre of gravity:        ys:         .0       zs:         .0
    centre of shear forces:   ym:         .0       zm:         .0
    principal axis angle:    psi:         .0

RR 600x400x15.
parametric cross section
    cross section type: rectangular tube
    a:      600.0          b:      400.0          s:       15.0
    Ax:    28520.575   Ay:     8573.865   Az:    15679.897
    Ix: 1.594556E+09   Iy: 1.438721E+09   Iz:  7.71466E+08
    centre of gravity:        ys:         .0       zs:         .0
    centre of shear forces:   ym:         .0       zm:         .0
    principal axis angle:    psi:         .0

RR 800x300x15.
parametric cross section
    cross section type: rectangular tube
    a:      800.0          b:      300.0          s:       15.0
    Ax:    31520.575   Ay:     4933.848   Az:    21831.523
    Ix: 1.423602E+09   Iy: 2.436613E+09   Iz: 5.244677E+08
    centre of gravity:        ys:         .0       zs:         .0
    centre of shear forces:   ym:         .0       zm:         .0
    principal axis angle:    psi:         .0

RR 800x300x20.
parametric cross section
    cross section type: rectangular tube
    a:      800.0          b:      300.0          s:       20.0
    Ax:    41369.911   Ay:     6425.748   Az:    28928.093
    Ix: 1.831735E+09   Iy: 3.127159E+09   Iz: 6.648609E+08
    centre of gravity:        ys:         .0       zs:         .0
    centre of shear forces:   ym:         .0       zm:         .0
    principal axis angle:    psi:         .0

RR 800x400x20.
parametric cross section
    cross section type: rectangular tube
    a:      800.0          b:      400.0          s:       20.0
    Ax:    45369.911   Ay:    10064.28    Az:    28617.086
    Ix: 3.082063E+09   Iy: 3.735692E+09   Iz: 1.272155E+09
    centre of gravity:        ys:         .0       zs:         .0
    centre of shear forces:   ym:         .0       zm:         .0
    principal axis angle:    psi:         .0

RR 80x80x6.3.
parametric cross section
    cross section type: rectangular tube
    a:       80.0          b:       80.0          s:        6.3
    Ax:     1823.17    Ay:      773.85    Az:      773.85
    Ix:  2561066.166   Iy:  1642819.189   Iz:  1642819.189
    centre of gravity:        ys:         .0       zs:         .0
    centre of shear forces:   ym:         .0       zm:         .0
    principal axis angle:    psi:         .0

HE B  200_
standardized cross section
    cross section type: H
    h:      200.0          b:      200.0          s:        9.0
    t:       15.0          r:       18.0
    Ax:     7808.0     Ay:     5000.0     Az:     1524.711
    Ix:   592800.0     Iy: 56960000.0     Iz: 20030000.0
    centre of gravity:        ys:         .0       zs:         .0
    centre of shear forces:   ym:         .0       zm:         .0
    principal axis angle:    psi:         .0
```

```
HE B  300_
standardized cross section
    cross section type: H
    h:      300.0          b:      300.0          s:       11.0
    t:       19.0          r:       27.0
    Ax:    14910.0     Ay:     9500.0     Az:     2840.941
    Ix:  1850000.0     Iy:    2.517E+08   Iz: 85630000.0
    centre of gravity:        ys:         .0       zs:         .0
    centre of shear forces:   ym:         .0       zm:         .0
    principal axis angle:    psi:         .0

HE B  500_
standardized cross section
    cross section type: H
    h:      500.0          b:      300.0          s:       14.5
    t:       28.0          r:       27.0
    Ax:    23860.0     Ay:    14000.0     Az:     6546.881
    Ix:  5384000.0     Iy:    1.072E+09   Iz:    1.262E+08
    centre of gravity:        ys:         .0       zs:         .0
    centre of shear forces:   ym:         .0       zm:         .0
    principal axis angle:    psi:         .0

HE B  800_
standardized cross section
    cross section type: H
    h:      800.0          b:      300.0          s:       17.5
    t:       33.0          r:       30.0
    Ax:    33420.0     Ay:    16500.0     Az:    13034.144
    Ix:  9460000.0     Iy:    3.591E+09   Iz:     1.49E+08
    centre of gravity:        ys:         .0       zs:         .0
    centre of shear forces:   ym:         .0       zm:         .0
    principal axis angle:    psi:         .0

IPE 120_
standardized cross section
    cross section type: H
    h:      120.0          b:       64.0          s:        4.4
    t:        6.3          r:        7.0
    Ax:     1321.0     Ay:      672.0     Az:      476.066
    Ix:    17400.0     Iy:  3180000.0     Iz:   276700.0
    centre of gravity:        ys:         .0       zs:         .0
    centre of shear forces:   ym:         .0       zm:         .0
    principal axis angle:    psi:         .0

IPE 140_
standardized cross section
    cross section type: H
    h:      140.0          b:       73.0          s:        4.7
    t:        6.9          r:        7.0
    Ax:     1643.0     Ay:      839.5     Az:      596.564
    Ix:    24500.0     Iy:  5410000.0     Iz:   449200.0
    centre of gravity:        ys:         .0       zs:         .0
    centre of shear forces:   ym:         .0       zm:         .0
    principal axis angle:    psi:         .0

IPE 160_
standardized cross section
    cross section type: H
    h:      160.0          b:       82.0          s:        5.0
    t:        7.4          r:        9.0
    Ax:     2009.0     Ay:     1011.333   Az:      728.495
    Ix:    36000.0     Iy:  8690000.0     Iz:   683100.0
    centre of gravity:        ys:         .0       zs:         .0
    centre of shear forces:   ym:         .0       zm:         .0
    principal axis angle:    psi:         .0
```

```
IPE 300_
standardized cross section
    cross section type: H
    h:      300.0          b:      150.0          s:        7.1
    t:       10.7          r:       15.0
    Ax:     5381.0     Ay:     2675.0     Az:     1965.328
    Ix:   201200.0     Iy: 83560000.0     Iz:  6040000.0
    centre of gravity:        ys:         .0       zs:         .0
    centre of shear forces:   ym:         .0       zm:         .0
    principal axis angle:    psi:         .0

RR 200x200x16.0_
standardized cross section
    cross section type: rectangular tube
    a:      200.0          b:      200.0          s:       16.0
    Ax:    11116.743   Ay:     4906.667   Az:     4906.667
    Ix: 1.025215E+08   Iy: 60763844.841   Iz: 60763844.841
    centre of gravity:        ys:         .0       zs:         .0
    centre of shear forces:   ym:         .0       zm:         .0
    principal axis angle:    psi:         .0

RR 300x300x20.
thin-walled cross section
    Ax:    22400.0     Ay:     9333.333   Az:     9333.333
    Ix:   4.3904E+08   Iy: 2.926933E+08   Iz: 2.926933E+08
    centre of gravity:        ys:      140.0       zs:      140.0
    centre of shear forces:   ym:      140.0       zm:      140.0
    principal axis angle:    psi:         .0

    part  | start| end  |   plate-   | plate length components |
    number| node | node |  thickness |       y    |      z     | type
    ------|------|------|------------|------------|------------|-------
        1 |    1 |    2 |    20.0    |   280.0    |      .0    |   I
        2 |    2 |    3 |    20.0    |      .0    |   280.0    |   I
        3 |    3 |    4 |    20.0    |  -280.0    |      .0    |   I
        4 |    4 |    1 |    20.0    |      .0    |  -280.0    |   C

    reference nod    1    coordinate y      .0        z      .0


RR 300x300x20.   1
thin-walled cross section
    Ax:    22400.0     Ay:     9333.333   Az:     9333.333
    Ix:   4.3904E+08   Iy: 2.926933E+08   Iz: 2.926933E+08
    centre of gravity:        ys:      140.0       zs:      140.0
    centre of shear forces:   ym:      140.0       zm:      140.0
    principal axis angle:    psi:         .0

    part  | start| end  |   plate-   | plate length components |
    number| node | node |  thickness |       y    |      z     | type
    ------|------|------|------------|------------|------------|-------
        1 |    1 |    2 |    20.0    |   280.0    |      .0    |   I
        2 |    2 |    3 |    20.0    |      .0    |   280.0    |   I
        3 |    3 |    4 |    20.0    |  -280.0    |      .0    |   I
        4 |    4 |    1 |    20.0    |      .0    |  -280.0    |   C

    reference nod    1    coordinate y      .0        z      .0


RR 800x400x20x15
thin-walled cross section
    Ax:    38800.0     Ay:     3754.831   Az:    13922.651
    Ix:  3764102.084   Iy:  3.52872E+09   Iz: 1.057338E+09
    centre of gravity:        ys:      192.5       zs:      390.0
    centre of shear forces:   ym:      448.06      zm:     1029.673
    principal axis angle:    psi:         .0
```

```
    part  | start| end  |   plate-   | plate length components |
    number| node | node |  thickness |       y    |      z     | type
    ------|------|------|------------|------------|------------|-------
        1 |    1 |    2 |    20.0    |   385.0    |      .0    |   I
        2 |    2 |    3 |    15.0    |      .0    |   780.0    |   I
        3 |    3 |    4 |    20.0    |  -385.0    |      .0    |   I
        4 |    4 |    5 |    15.0    |      .0    |  -780.0    |   I

    reference nod    1    coordinate y      .0        z      .0


RR_800x300x20.
thin-walled cross section
    Ax:    42400.0     Ay:     6425.748   Az:    28928.093
    Ix: 1.799946E+09   Iy:  3.28536E+09   Iz: 6.846933E+08
    centre of gravity:        ys:      140.0       zs:      390.0
    centre of shear forces:   ym:      140.0       zm:      390.0
    principal axis angle:    psi:         .0

    part  | start| end  |   plate-   | plate length components |
    number| node | node |  thickness |       y    |      z     | type
    ------|------|------|------------|------------|------------|-------
        1 |    1 |    2 |    20.0    |   280.0    |      .0    |   I
        2 |    2 |    3 |    20.0    |      .0    |   780.0    |   I
        3 |    3 |    4 |    20.0    |  -280.0    |      .0    |   I
        4 |    4 |    1 |    20.0    |      .0    |  -780.0    |   C

    reference nod    1    coordinate y      .0        z      .0


RR_800x400x20.
thin-walled cross section
    Ax:    46400.0     Ay:    10064.28    Az:    28617.086
    Ix: 3.029412E+09   Iy:  3.89376E+09   Iz: 1.309227E+09
    centre of gravity:        ys:      190.0       zs:      390.0
    centre of shear forces:   ym:      190.0       zm:      390.0
    principal axis angle:    psi:         .0

    part  | start| end  |   plate-   | plate length components |
    number| node | node |  thickness |       y    |      z     | type
    ------|------|------|------------|------------|------------|-------
        1 |    1 |    2 |    20.0    |   380.0    |      .0    |   I
        2 |    2 |    3 |    20.0    |      .0    |   780.0    |   I
        3 |    3 |    4 |    20.0    |  -380.0    |      .0    |   I
        4 |    4 |    1 |    20.0    |      .0    |  -780.0    |   C

    reference nod    1    coordinate y      .0        z      .0
```

```
documentation of input data

output date: 27.03.2013 13:10:41

data file: ...elader\Großes Modell\KRASTA\00000 - MUSTER Schiffsbelader_V03

6 Subsystems
393 Beams
242 Nodes
24 Cross Sections
19 Load Cases
33 Mass Cases

units:
  mm  N  kg  sec  °C  °  -  .


output of Materials
===================

name of material
    comment

S235_
    E-mod.     :   210000.0  S-mod.     :    81000.0  density    :  8.00204E-06
    classifications:
      DIN 15018       St 37
      DIN 18800       St 37
      FEM 1.001       Fe 360
      ISO 5049-1      Fe 360

S355_
    E-mod.     :   210000.0  S-mod.     :    81000.0  density    :  8.00204E-06
    classifications:
      DIN 15018       St 52-3
      DIN 18800       St 52-3
      FEM 1.001       Fe 510
      ISO 5049-1      Fe 510
```

DT 800x300x20x15
Ax: 23486. Ay: 10000. Az: 11256. [mm²]
Ix: 3265150. Iy: 2386570409. Iz: 90222185. [mm**4]
principle axis angle: .0 [°]
centre of gravity: ys: .0, zs: .0 [mm]
centre of shear forces: ym: .0, zm: .0 [mm]

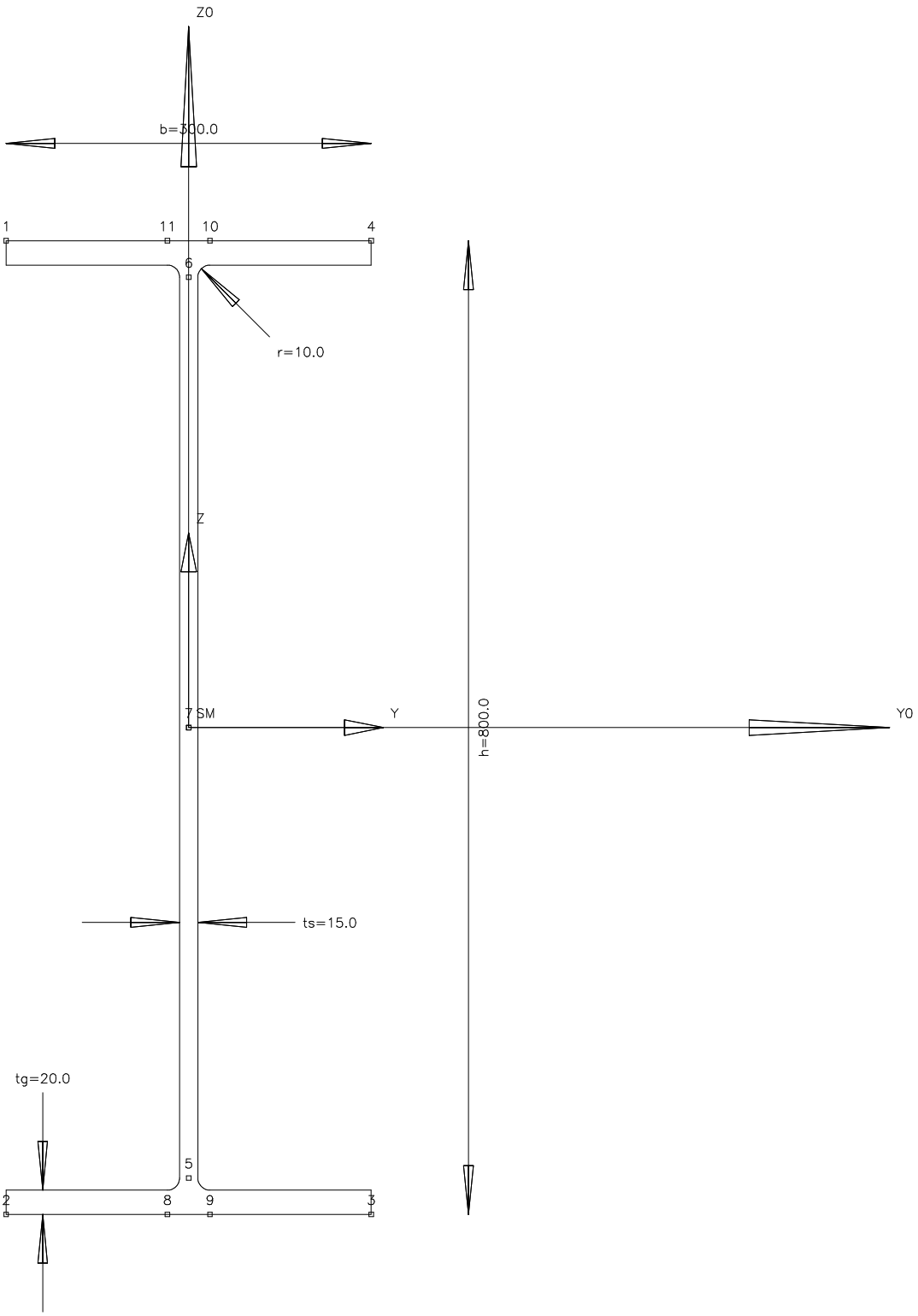

00000 - MUSTER Schiffsbelader_V03_001.kpl

```
HE B  200_
Ax: 7808.  Ay: 5000.  Az: 1525. [mm²]
Ix: 592800.  Iy: 56960000.  Iz: 20030000. [mm**4]
principle axis angle: .0 [°]
centre of gravity: ys: .0, zs: .0 [mm]
centre of shear forces: ym: .0, zm: .0 [mm]
```

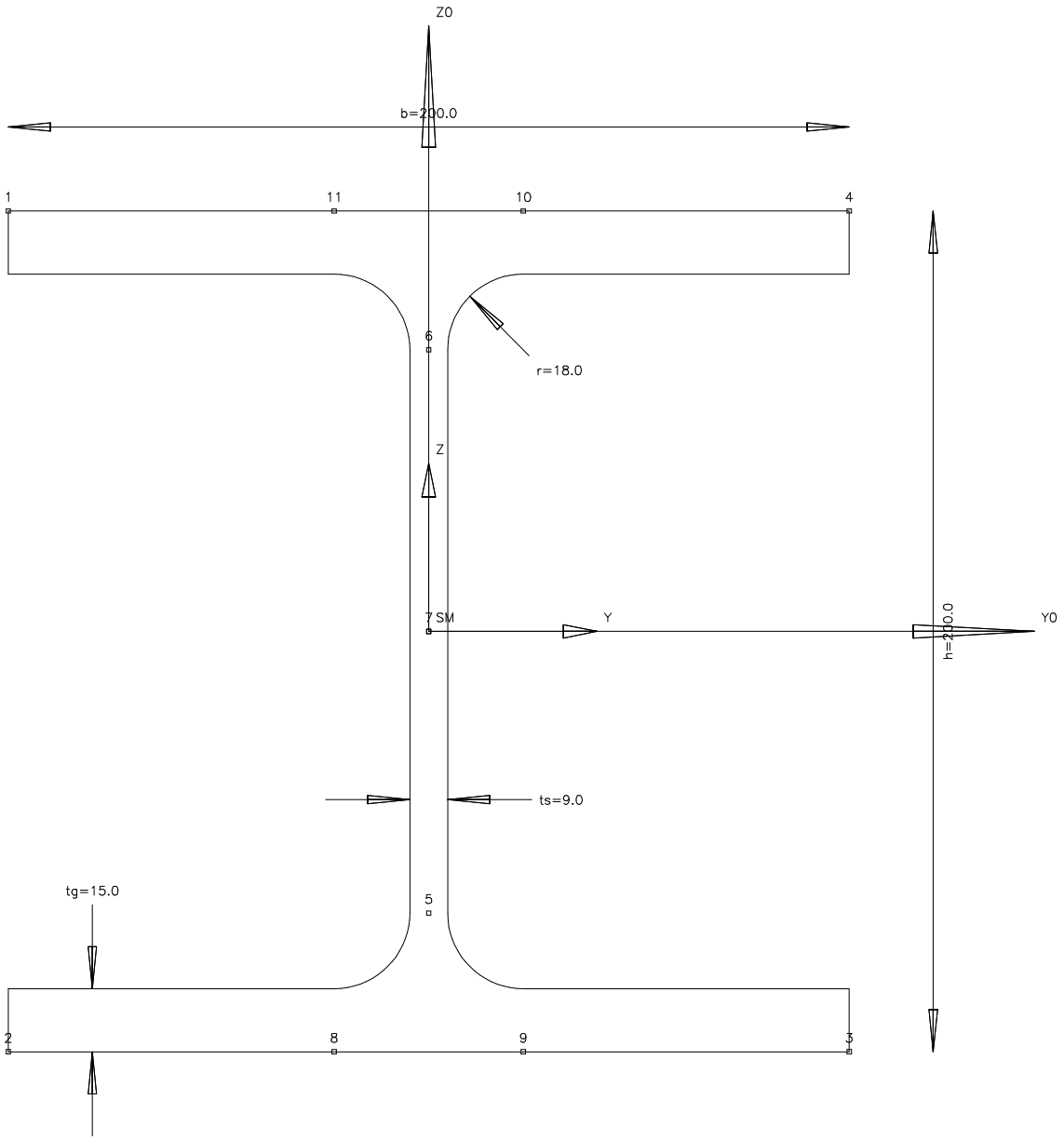

```
HE B  300_
Ax: 14910.  Ay: 9500.  Az: 2841. [mm²]
Ix: 1850000.  Iy: 251700000.  Iz: 85630000. [mm**4]
principle axis angle: .0 [°]
centre of gravity: ys: .0, zs: .0 [mm]
centre of shear forces: ym: .0, zm: .0 [mm]
```

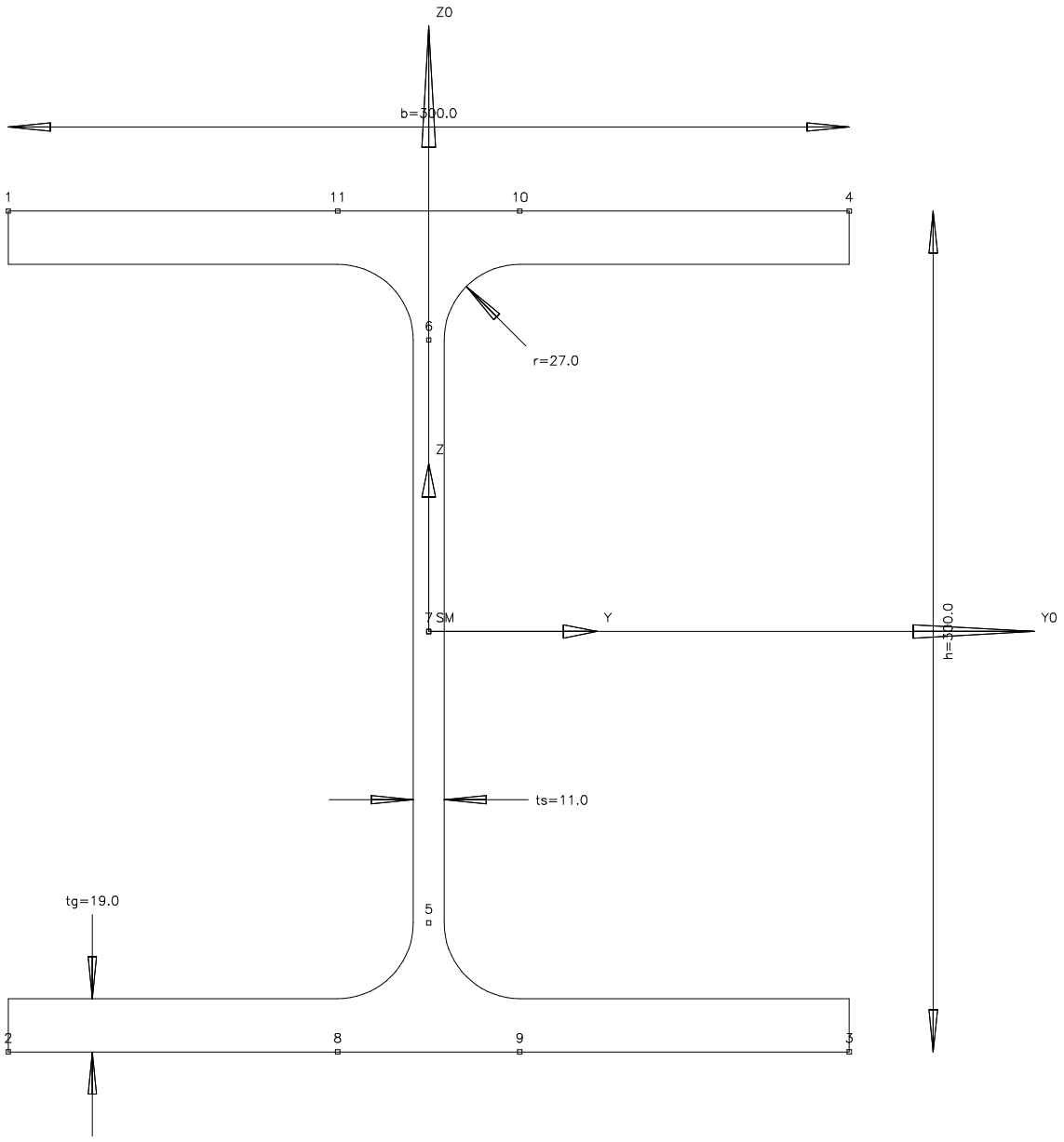

```
HE B  500_
Ax: 23860.  Ay: 14000.  Az: 6547. [mm²]
Ix: 5384000.  Iy: 1072000000.  Iz: 126200000. [mm**4]
principle axis angle: .0 [°]
centre of gravity: ys: .0, zs: .0 [mm]
centre of shear forces: ym: .0, zm: .0 [mm]
```

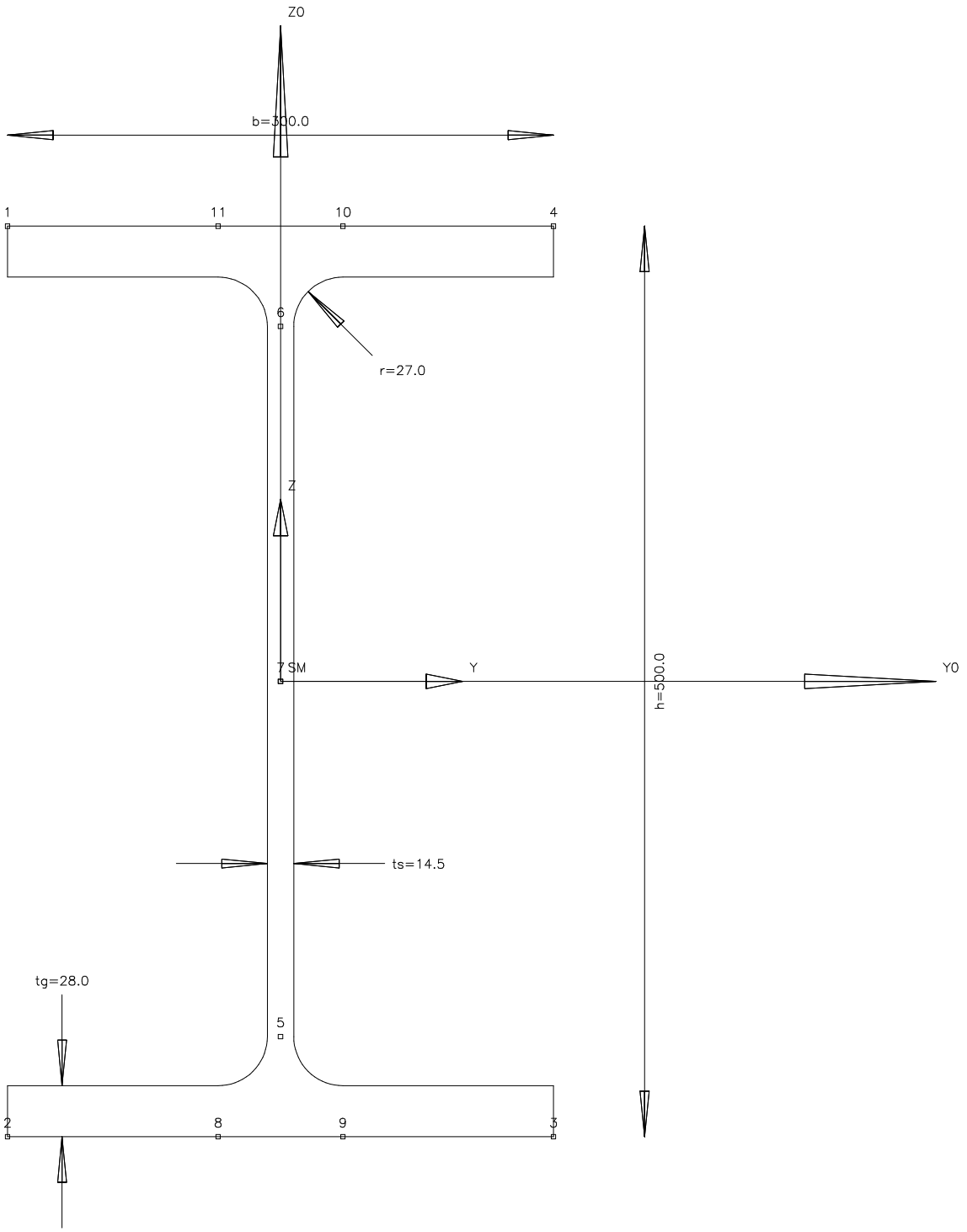

00000 - MUSTER Schiffsbelader_V03_012.kpl

```
HE B  800_
Ax: 33420.  Ay: 16500.  Az: 13034. [mm²]
Ix: 9460000.  Iy: 3591000000.  Iz: 149000000. [mm**4]
principle axis angle: .0 [°]
centre of gravity: ys: .0, zs: .0 [mm]
centre of shear forces: ym: .0, zm: .0 [mm]
```

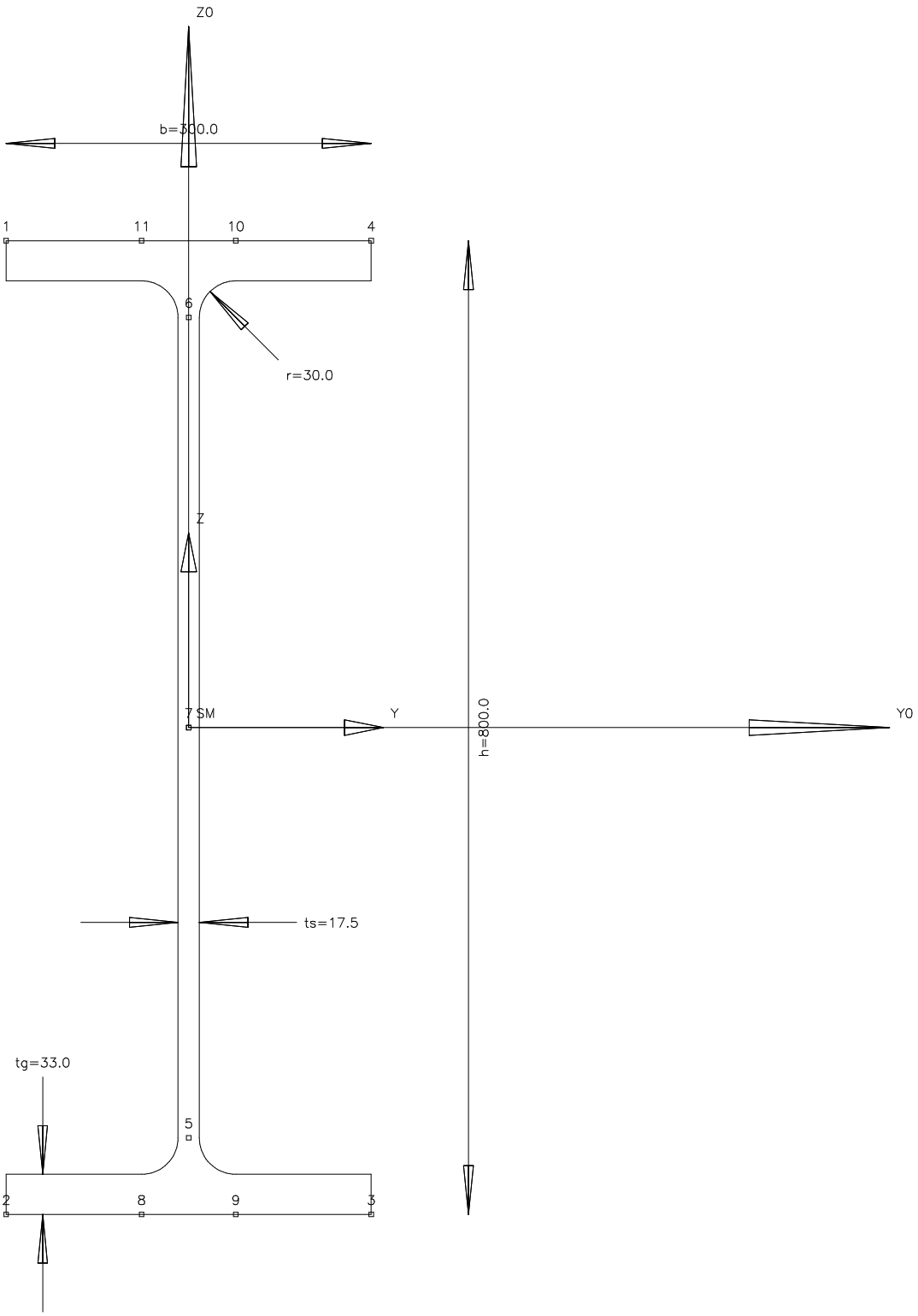

00000 - MUSTER Schiffsbelader_V03_013.kpl

```
IPE 120_
Ax: 1321.  Ay: 672.  Az: 476. [mm²]
Ix: 17400.  Iy: 3180000.  Iz: 276700. [mm**4]
principle axis angle: .0 [°]
centre of gravity: ys: .0, zs: .0 [mm]
centre of shear forces: ym: .0, zm: .0 [mm]
```

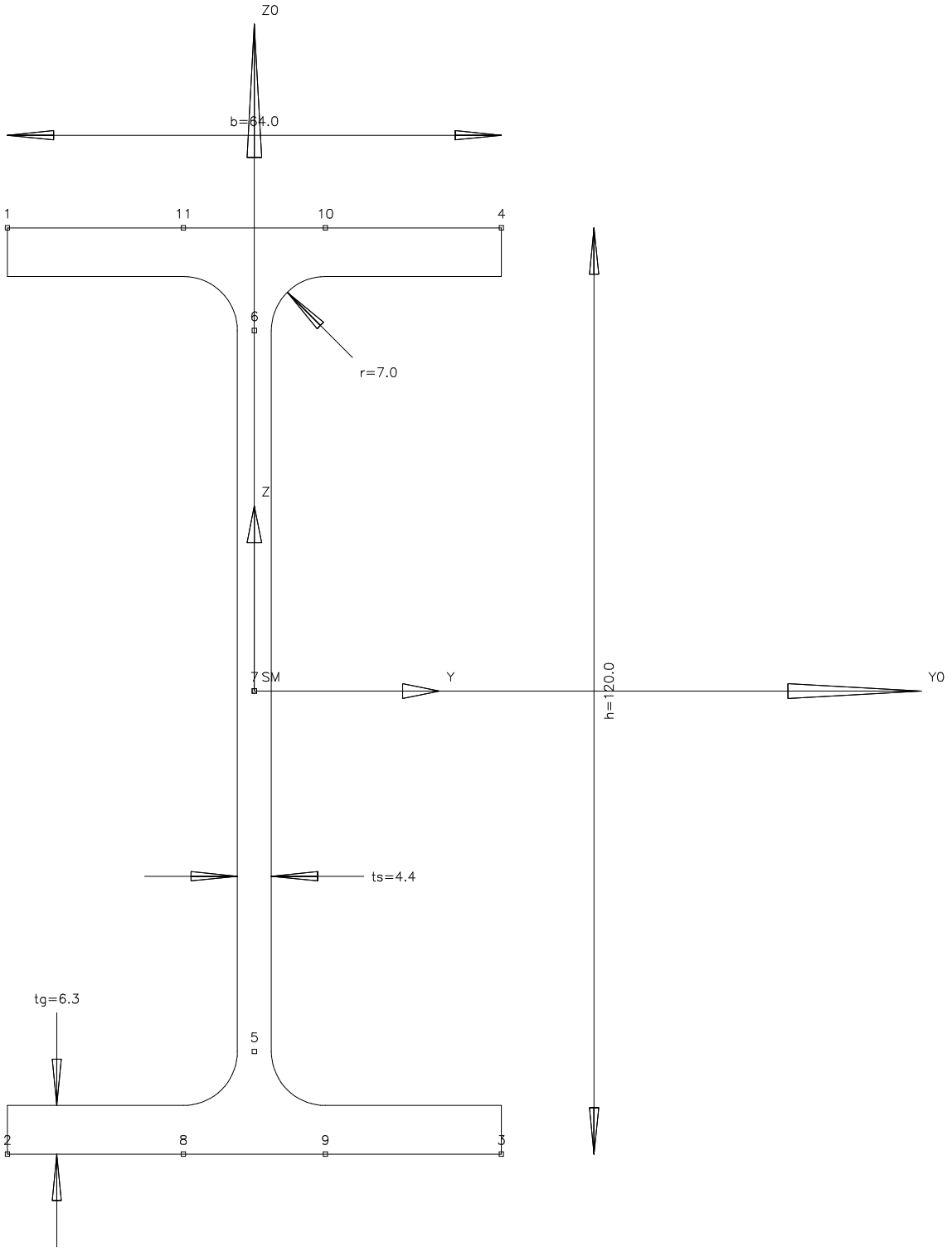

```
IPE 140_
Ax: 1643.  Ay: 840.  Az: 597. [mm²]
Ix: 24500.  Iy: 5410000.  Iz: 449200. [mm**4]
principle axis angle: .0 [°]
centre of gravity: ys: .0, zs: .0 [mm]
centre of shear forces: ym: .0, zm: .0 [mm]
```

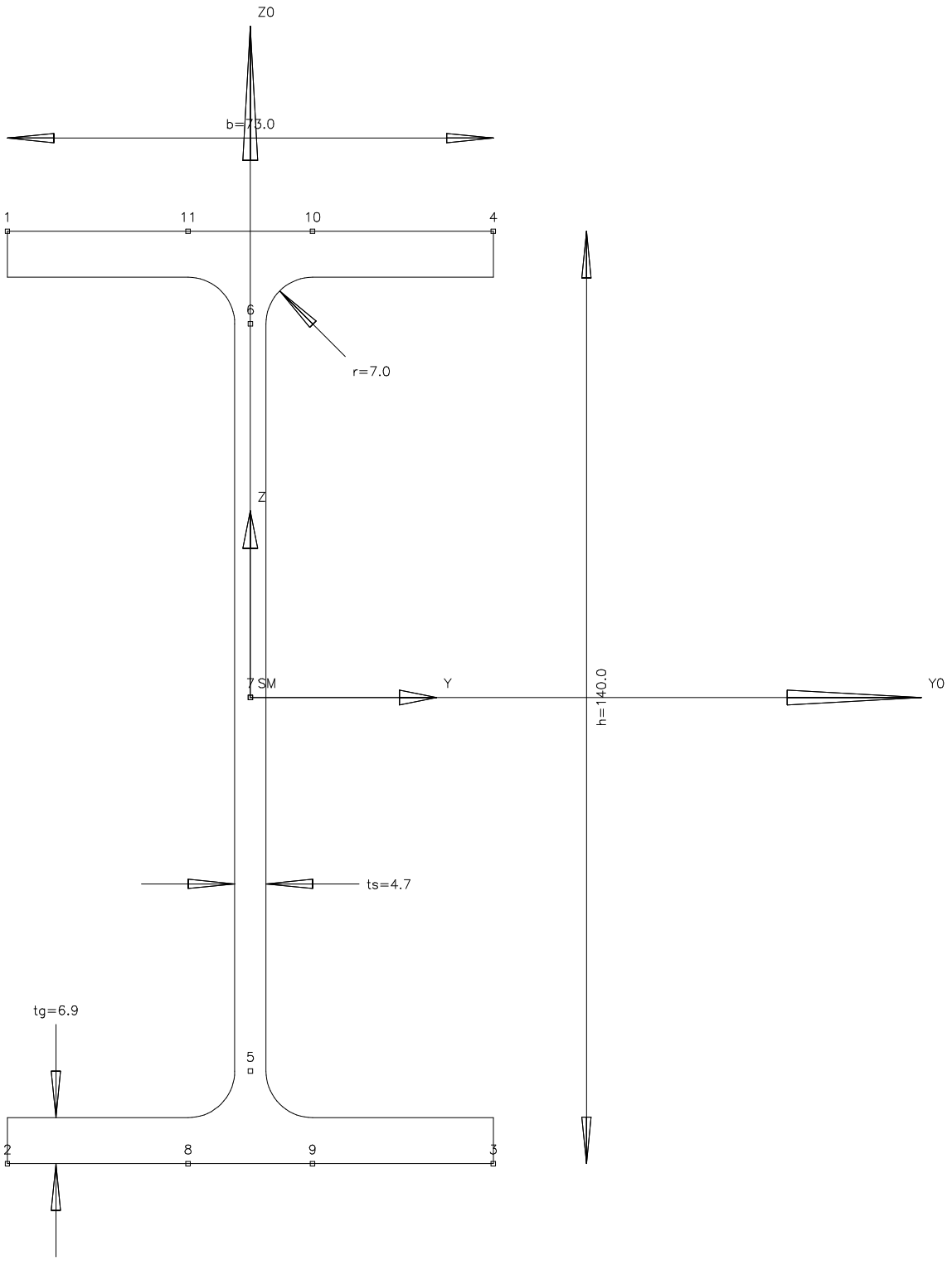

```
IPE 160_
Ax: 2009.  Ay: 1011.  Az: 728. [mm²]
Ix: 36000.  Iy: 8690000.  Iz: 683100. [mm**4]
principle axis angle: .0 [°]
centre of gravity: ys: .0, zs: .0 [mm]
centre of shear forces: ym: .0, zm: .0 [mm]
```

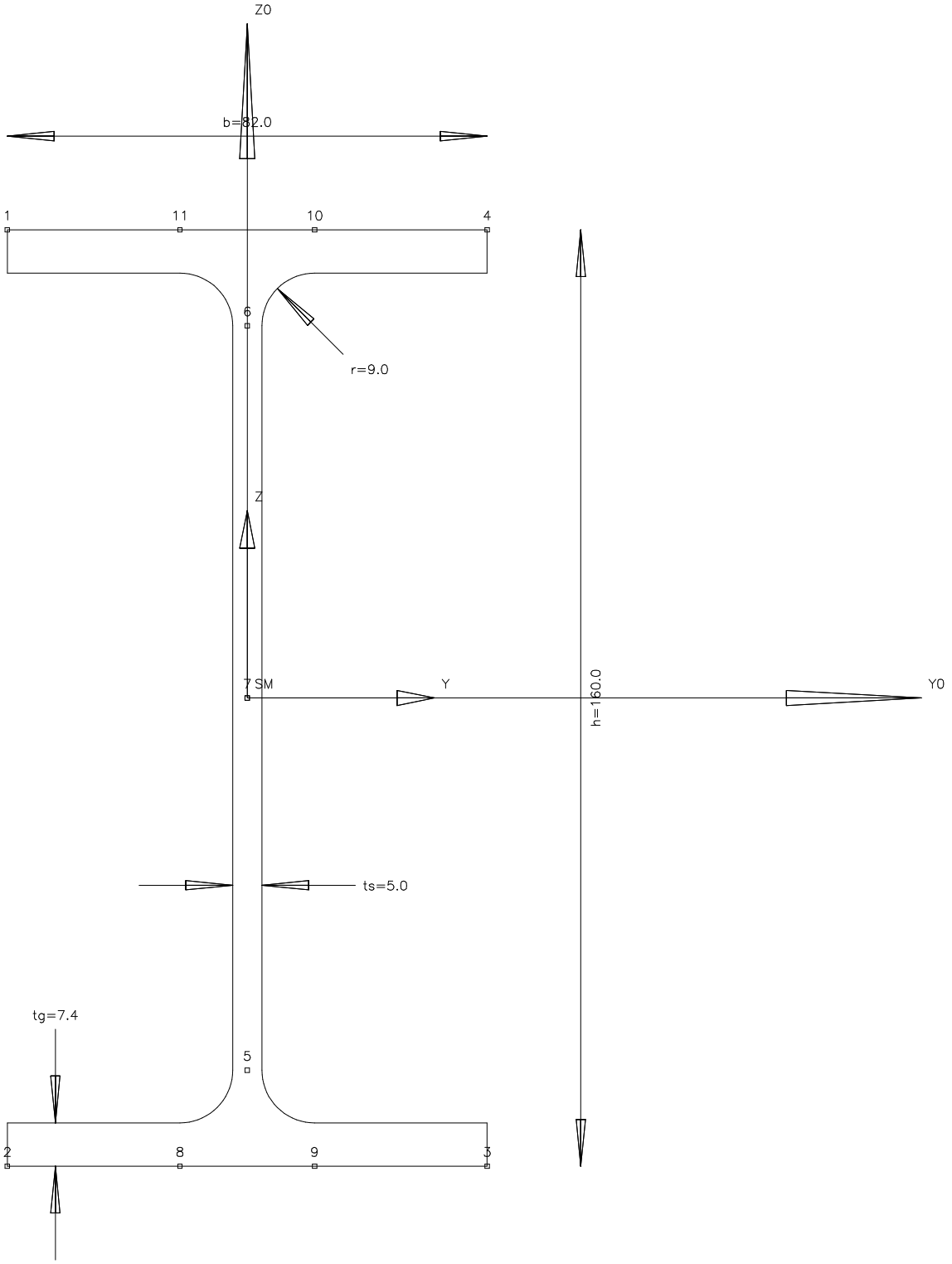

```
IPE 300_
Ax: 5381.  Ay: 2675.  Az: 1965. [mm²]
Ix: 201200.  Iy: 83560000.  Iz: 6040000. [mm**4]
principle axis angle: .0 [°]
centre of gravity: ys: .0, zs: .0 [mm]
centre of shear forces: ym: .0, zm: .0 [mm]
```

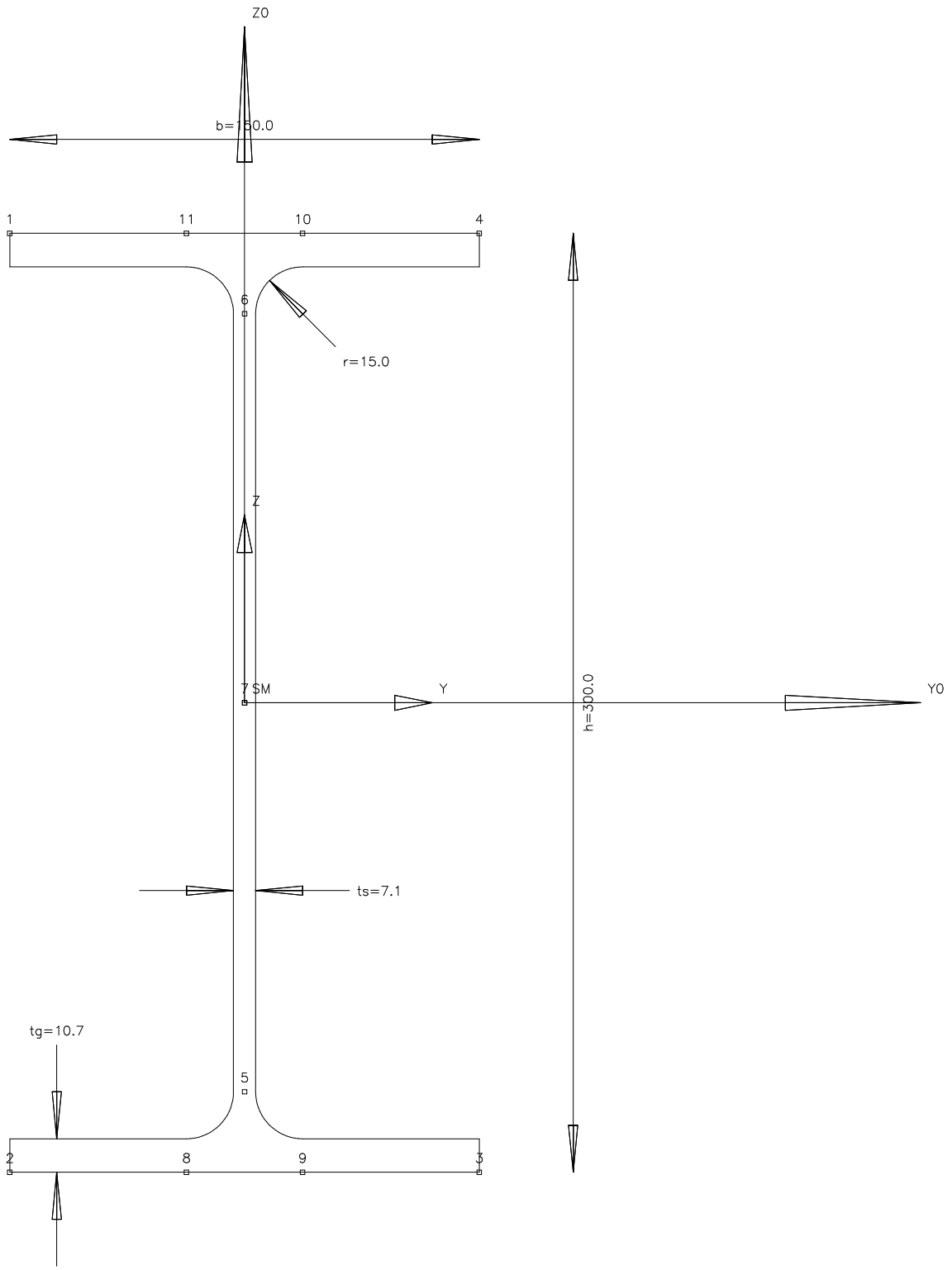

00000 - MUSTER Schiffsbelader_V03_017.kpl

RR 120x120x8.
Ax: 3485. Ay: 1493. Az: 1493. [mm²]
Ix: 11476477. Iy: 7197835. Iz: 7197835. [mm**4]
principle axis angle: .0 [°]
centre of gravity: ys: .0, zs: .0 [mm]
centre of shear forces: ym: .0, zm: .0 [mm]

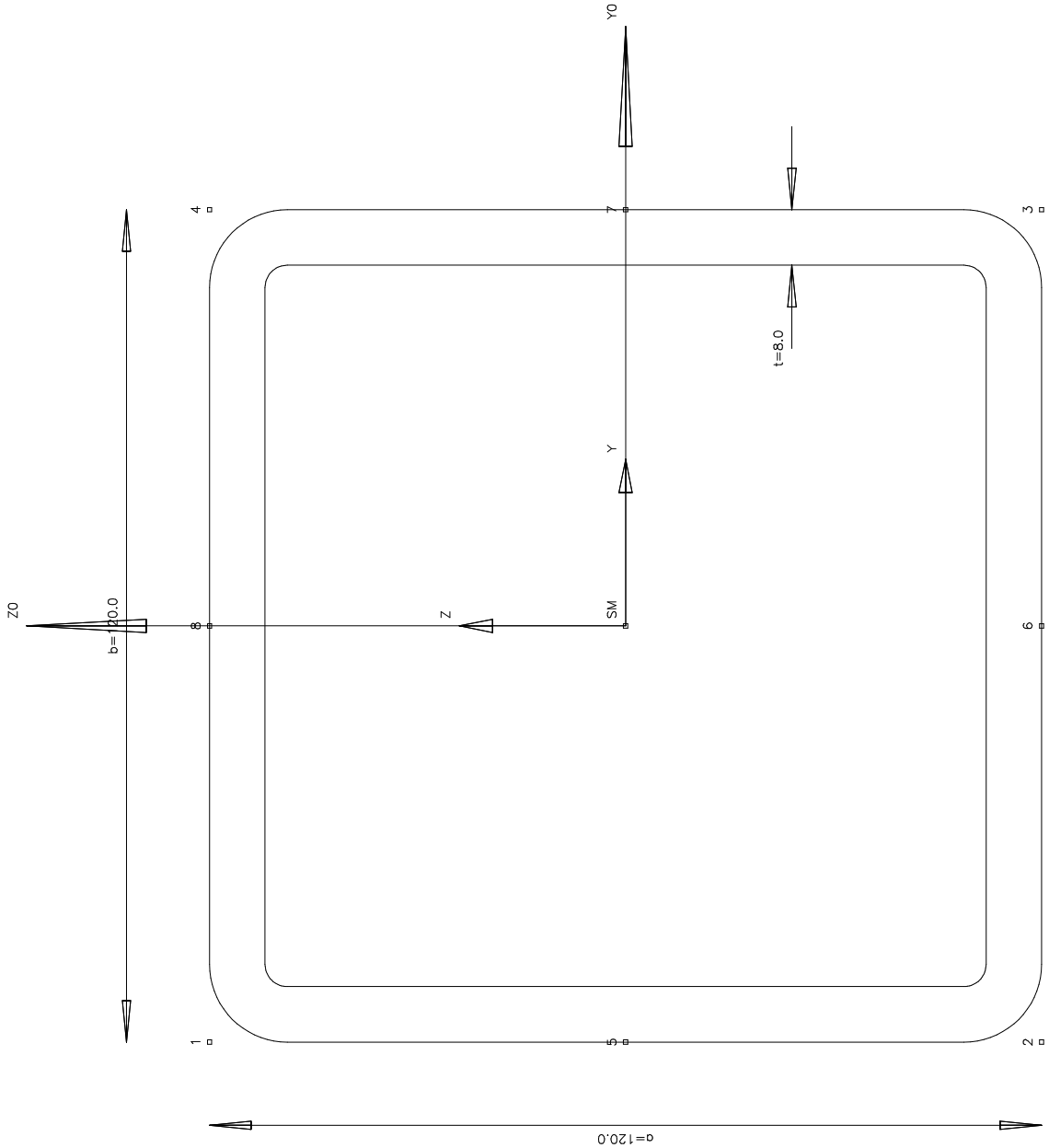

00000 - MUSTER Schiffsbelader_V03_002.kpl

RR 200x200x10.
Ax: 7342. Ay: 3167. Az: 3167. [mm²]
Ix: 70238005. Iy: 43376334. Iz: 43376334. [mm**4]
principle axis angle: .0 [°]
centre of gravity: ys: .0, zs: .0 [mm]
centre of shear forces: ym: .0, zm: .0 [mm]

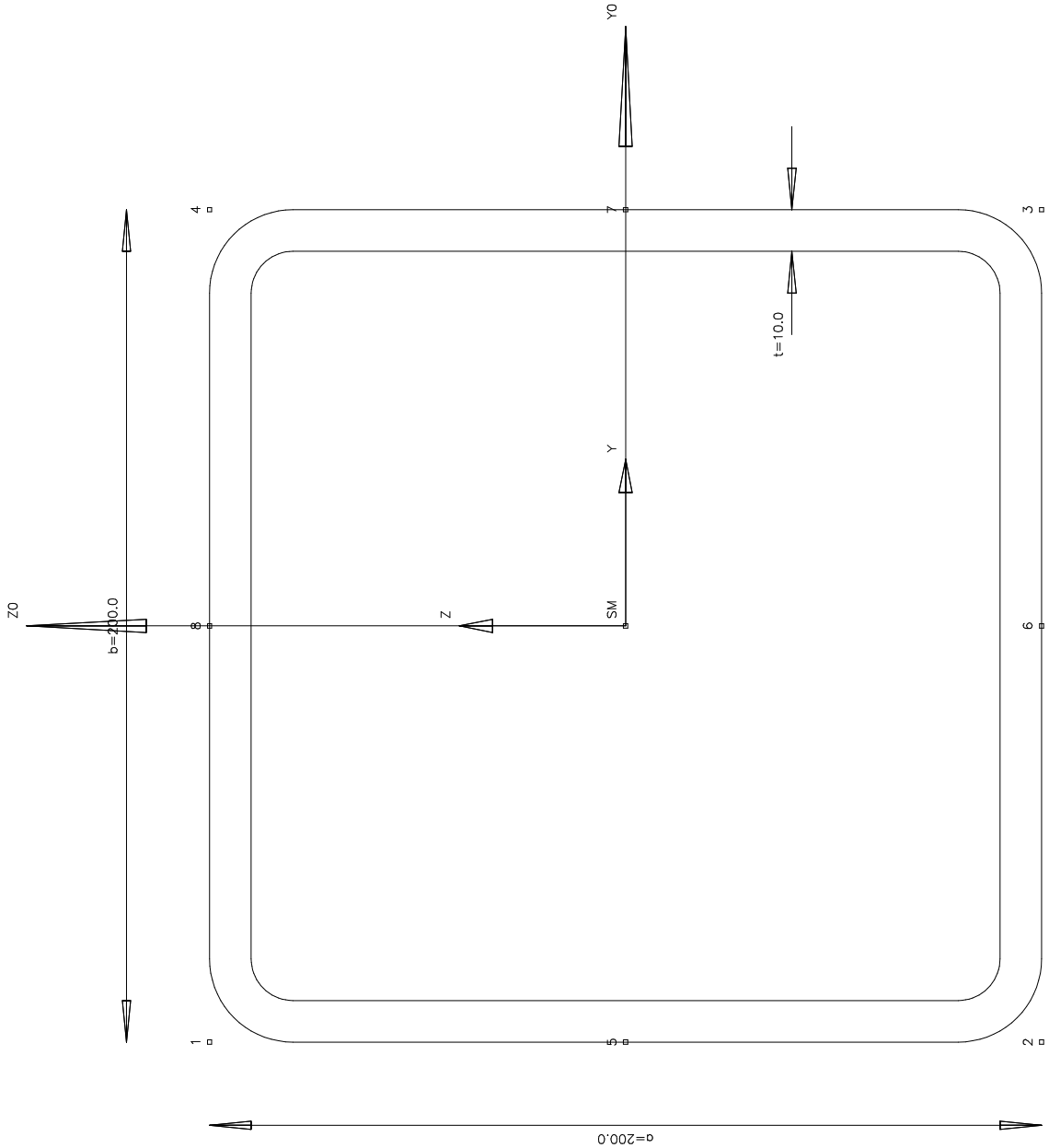

00000 - MUSTER Schiffsbelader_V03_003.kpl

```
RR 200x200x16.0_
Ax: 11117.  Ay: 4907.  Az: 4907. [mm²]
Ix: 102521515.  Iy: 60763845.  Iz: 60763845. [mm**4]
principle axis angle: .0 [°]
centre of gravity: ys: .0, zs: .0 [mm]
centre of shear forces: ym: .0, zm: .0 [mm]
```

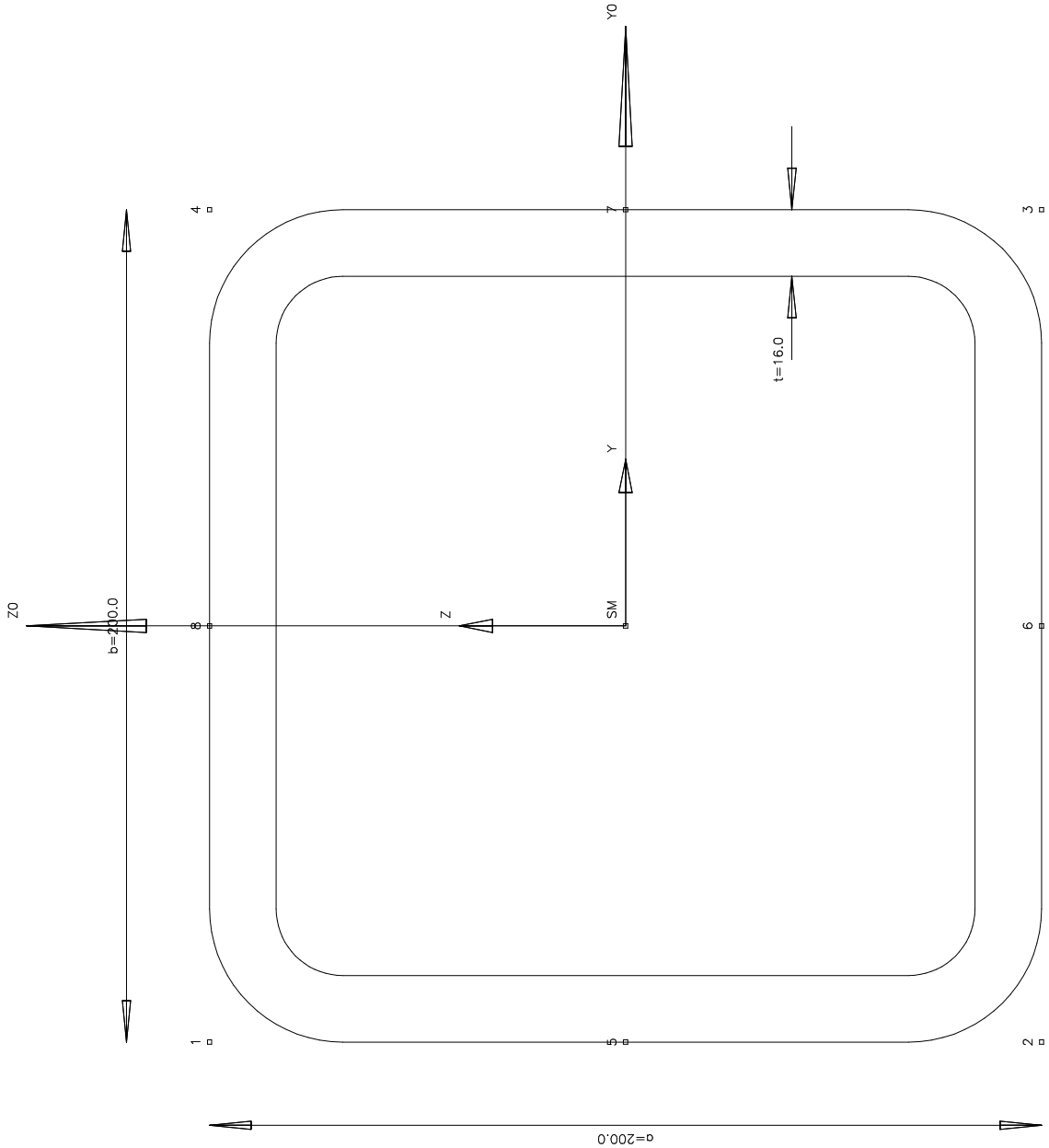

RR 300x300x20.
Ax: 22400. Ay: 9333. Az: 9333. [mm²]
Ix: 439040000. Iy: 292693333. Iz: 292693333. [mm**4]
principle axis angle: .0 [°]
centre of gravity: ys: 140.0, zs: 140.0 [mm]
centre of shear forces: ym: 140.0, zm: 140.0 [mm]

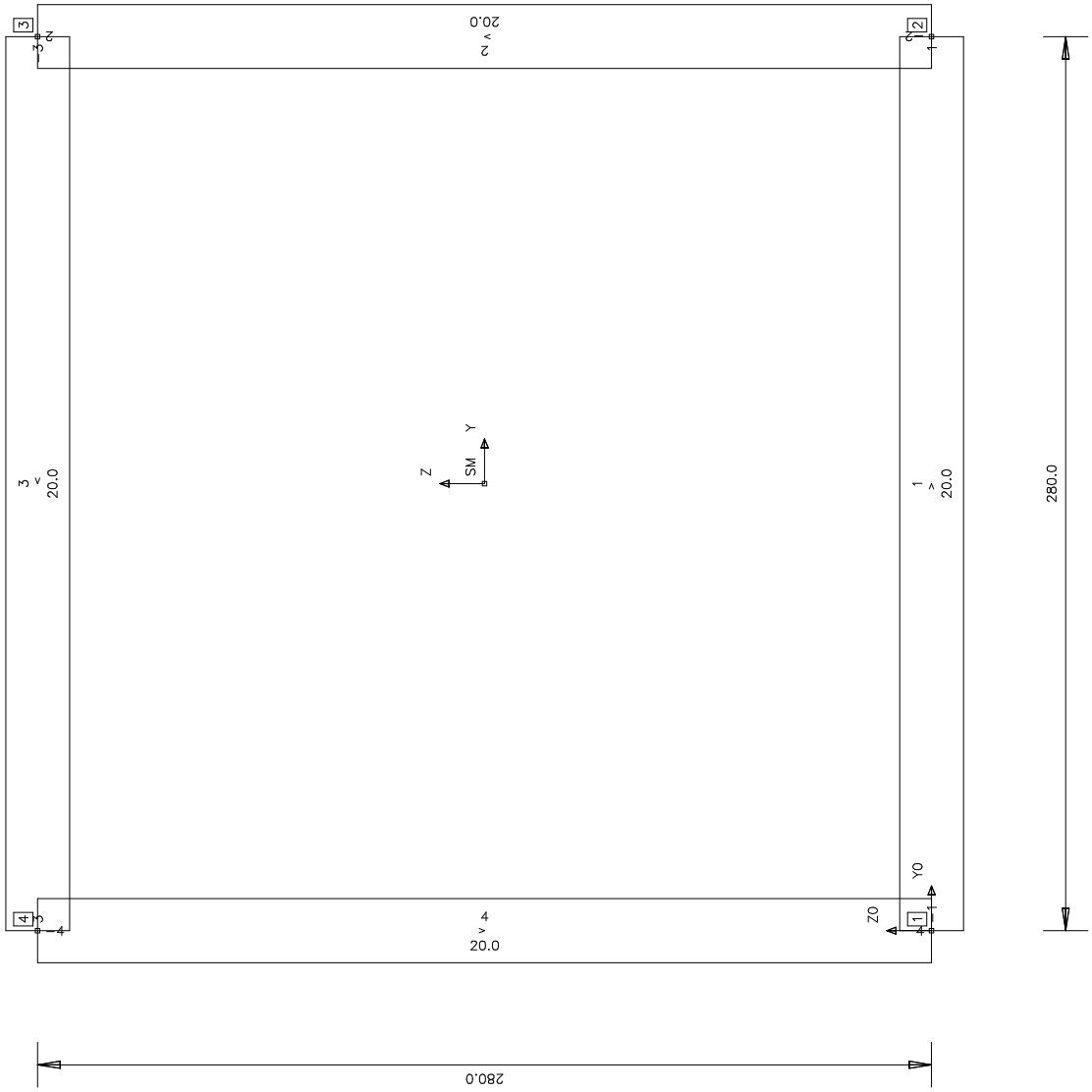

```
RR 300x300x20.   1
Ax: 22400.  Ay: 9333.  Az: 9333. [mm²]
Ix: 439040000.  Iy: 292693333.  Iz: 292693333. [mm**4]
principle axis angle: .0 [°]
centre of gravity: ys: 140.0, zs: 140.0 [mm]
centre of shear forces: ym: 140.0, zm: 140.0 [mm]
```

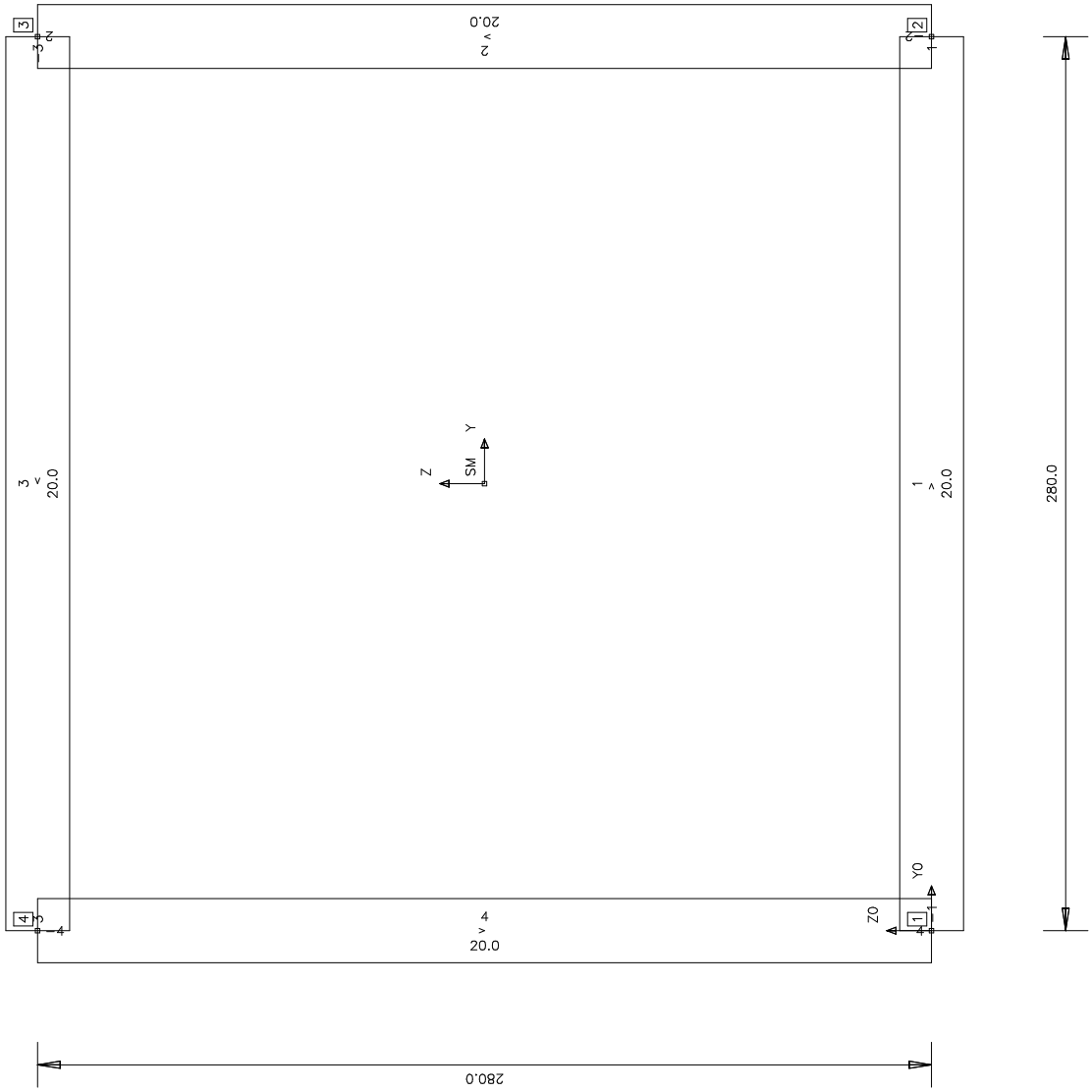

RR 40x40x4.
Ax: 562. Ay: 240. Az: 240. [mm²]
Ix: 190171. Iy: 120930. Iz: 120930. [mm**4]
principle axis angle: .0 [°]
centre of gravity: ys: .0, zs: .0 [mm]
centre of shear forces: ym: .0, zm: .0 [mm]

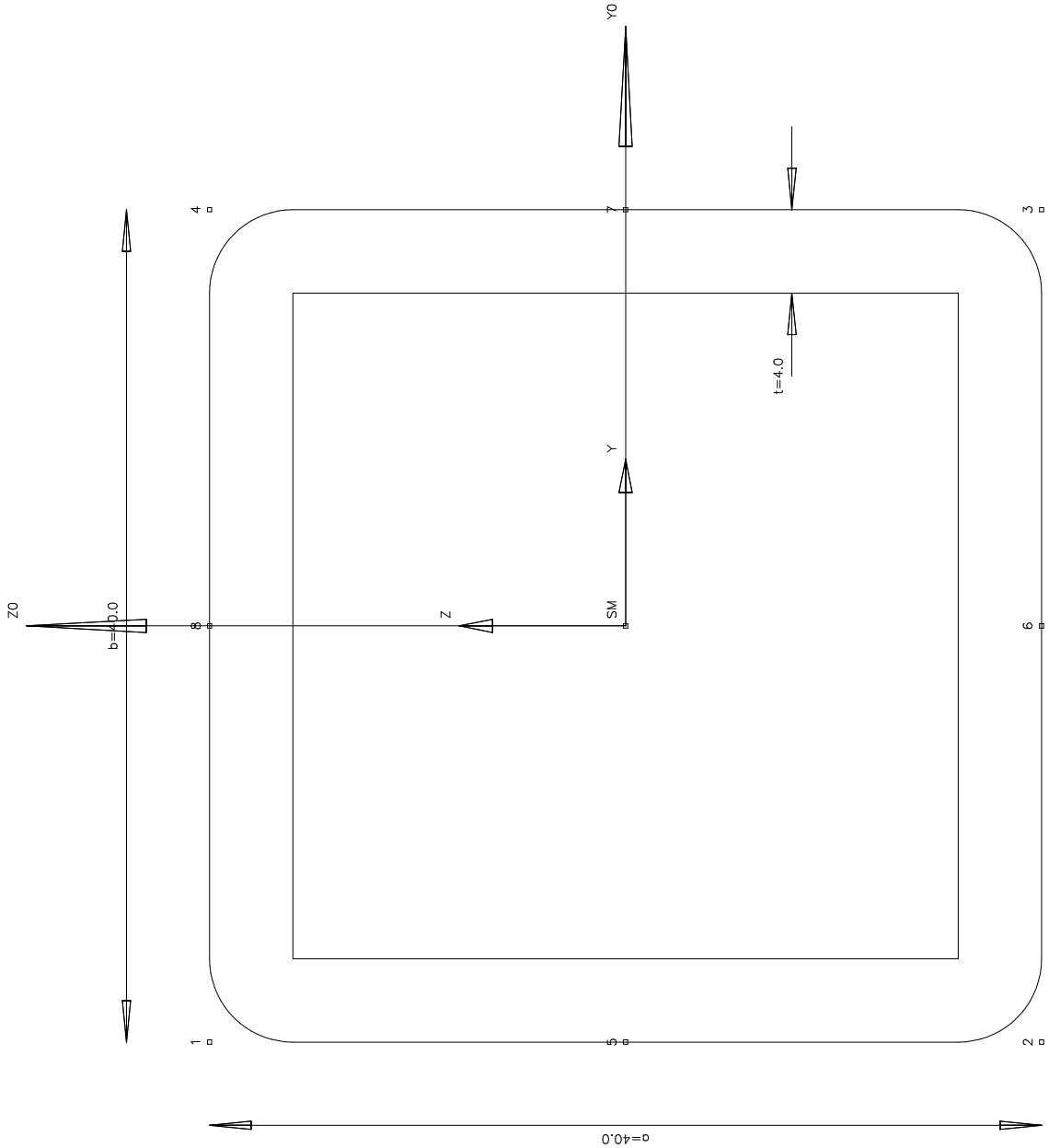

RR 600x400x15.
Ax: 28521. Ay: 8574. Az: 15680. [mm²]
Ix: 1594556356. Iy: 1438721332. Iz: 771466030. [mm**4]
principle axis angle: .0 [°]
centre of gravity: ys: .0, zs: .0 [mm]
centre of shear forces: ym: .0, zm: .0 [mm]

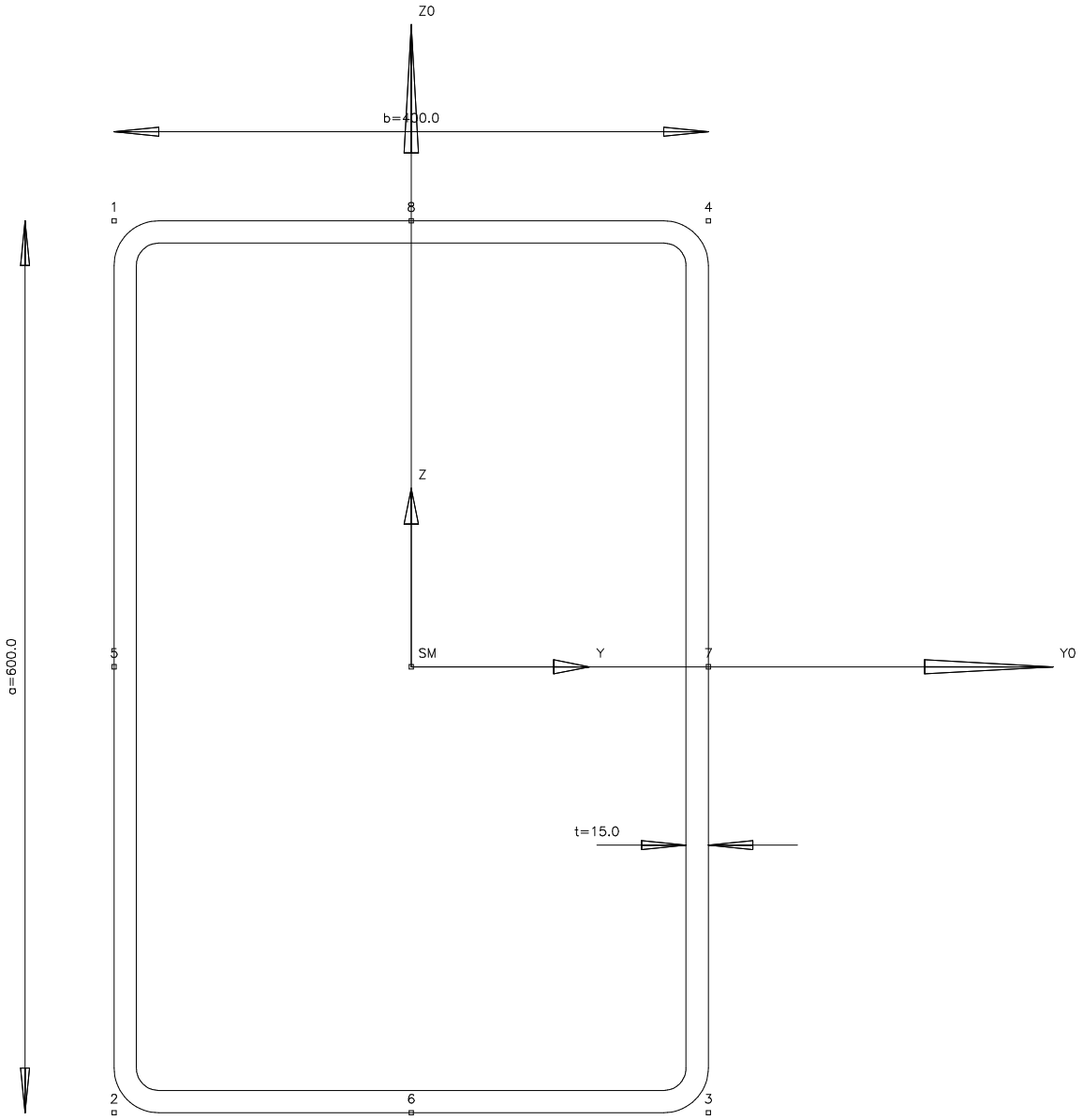

```
RR 800x300x15.
Ax: 31521.  Ay: 4934.  Az: 21832. [mm²]
Ix: 1423602043.  Iy: 2436613135.  Iz: 524467692. [mm**4]
principle axis angle: .0 [°]
centre of gravity: ys: .0, zs: .0 [mm]
centre of shear forces: ym: .0, zm: .0 [mm]
```

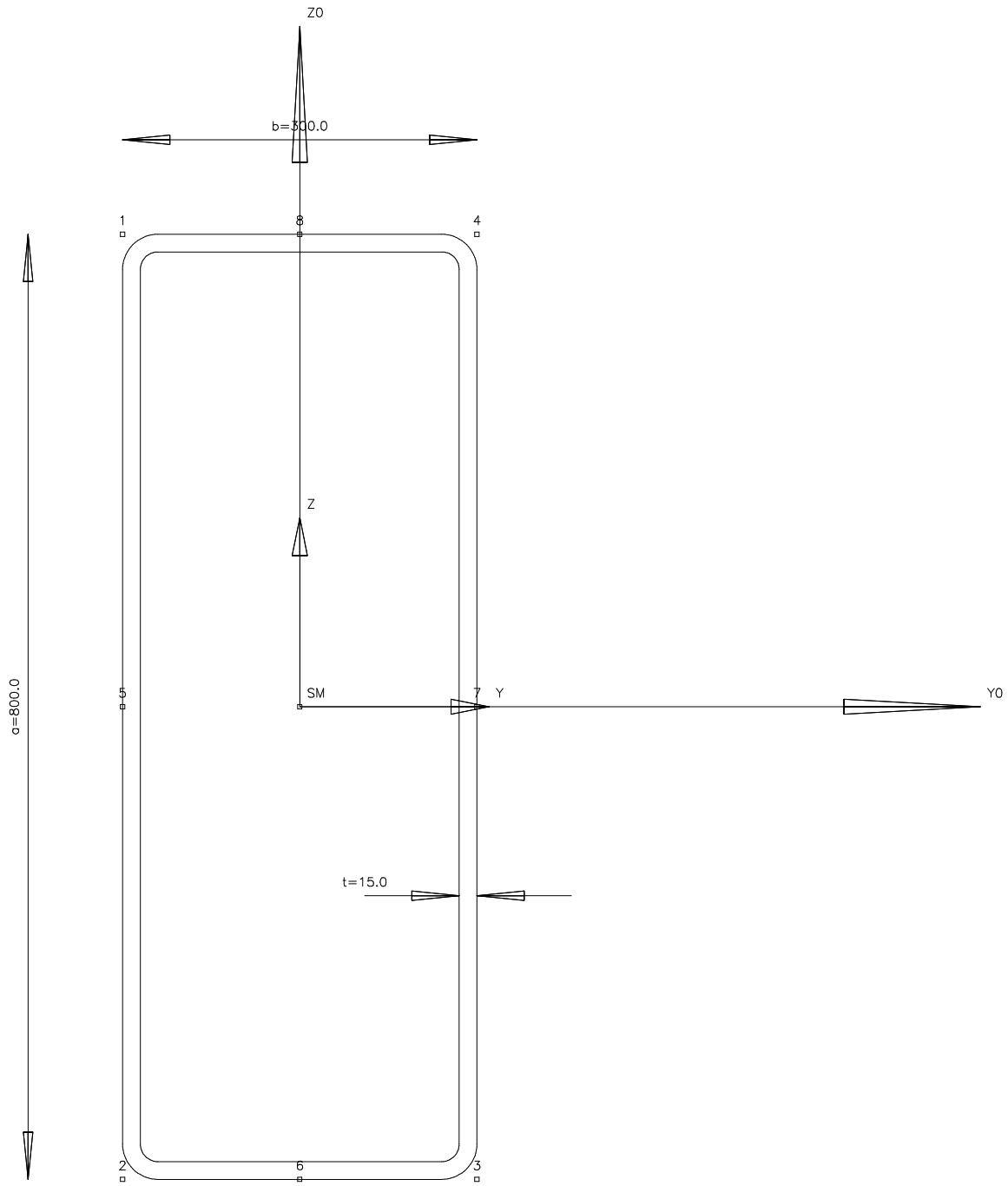

```
RR 800x300x20.
Ax: 41370.  Ay: 6426.  Az: 28928. [mm²]
Ix: 1831735130.  Iy: 3127158778.  Iz: 664860881. [mm**4]
principle axis angle: .0 [°]
centre of gravity: ys: .0, zs: .0 [mm]
centre of shear forces: ym: .0, zm: .0 [mm]
```

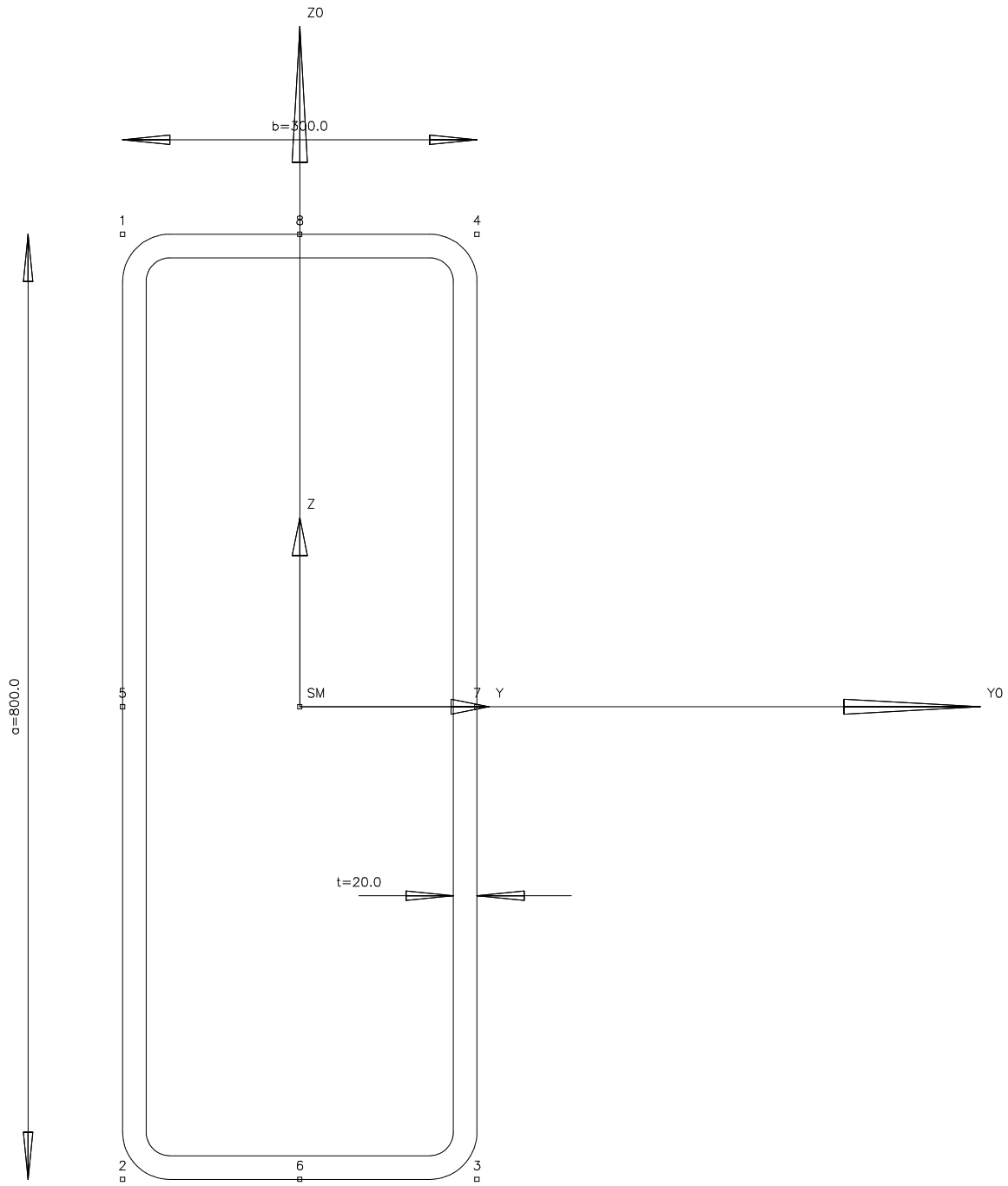

```
RR 800x400x20.
Ax: 45370.  Ay: 10064.  Az: 28617. [mm²]
Ix: 3082063053.  Iy: 3735692112.  Iz: 1272154682. [mm**4]
principle axis angle: .0 [°]
centre of gravity: ys: .0, zs: .0 [mm]
centre of shear forces: ym: .0, zm: .0 [mm]
```

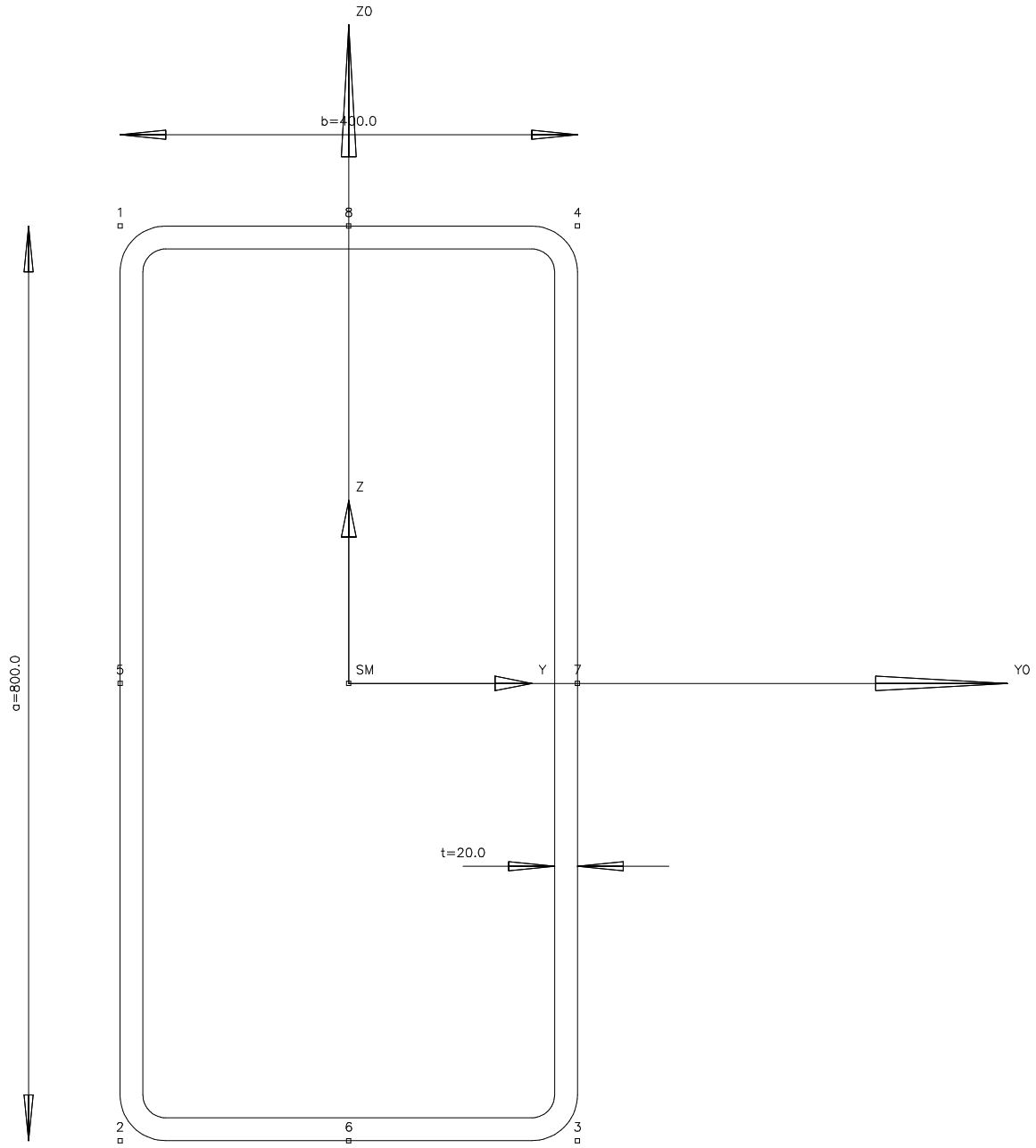

```
RR 800x400x20x15
Ax: 38800.  Ay: 3755.  Az: 13923. [mm²]
Ix: 3764102.  Iy: 3528720000.  Iz: 1057338333. [mm**4]
principle axis angle: .0 [°]
centre of gravity: ys: 192.5, zs: 390.0 [mm]
centre of shear forces: ym: 448.1, zm: 1029.7 [mm]
```

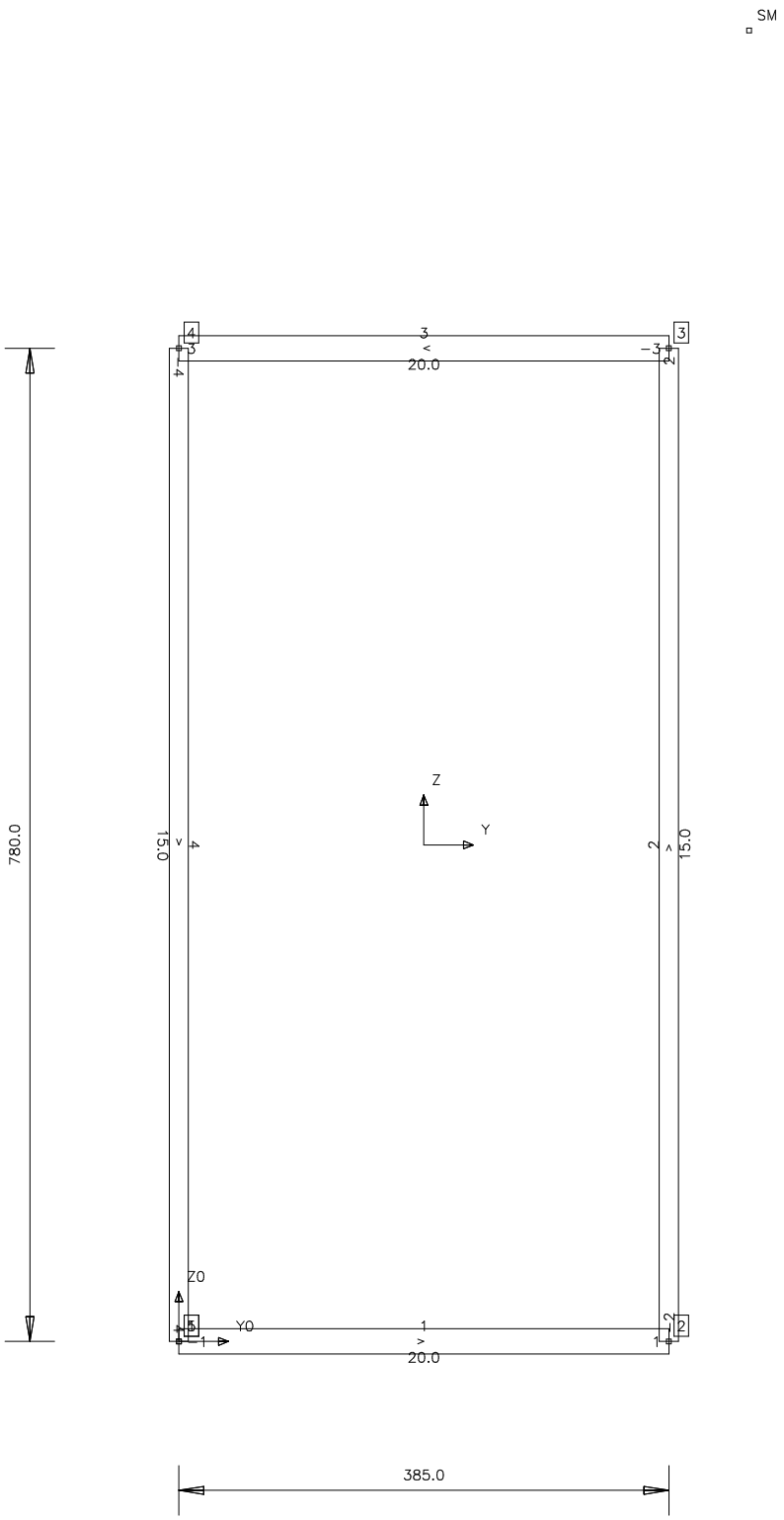

```
RR 80x80x6.3.
Ax: 1823.  Ay: 774.  Az: 774. [mm²]
Ix: 2561066.  Iy: 1642819.  Iz: 1642819. [mm**4]
principle axis angle: .0 [°]
centre of gravity: ys: .0, zs: .0 [mm]
centre of shear forces: ym: .0, zm: .0 [mm]
```

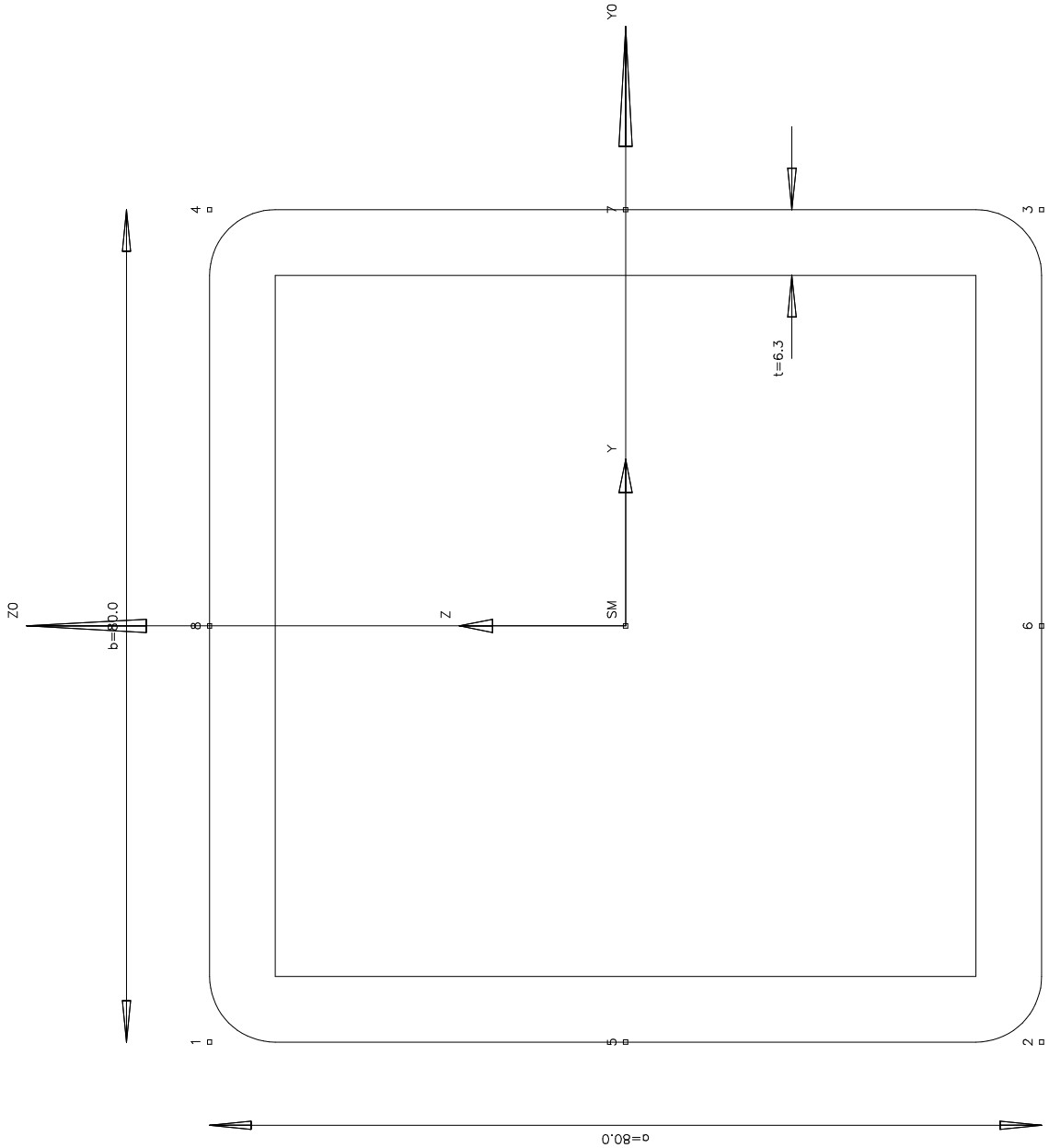

RR_800x300x20.
Ax: 42400. Ay: 6426. Az: 28928. [mm²]
Ix: 1799945660. Iy: 3285360000. Iz: 684693333. [mm**4]
principle axis angle: .0 [°]
centre of gravity: ys: 140.0, zs: 390.0 [mm]
centre of shear forces: ym: 140.0, zm: 390.0 [mm]

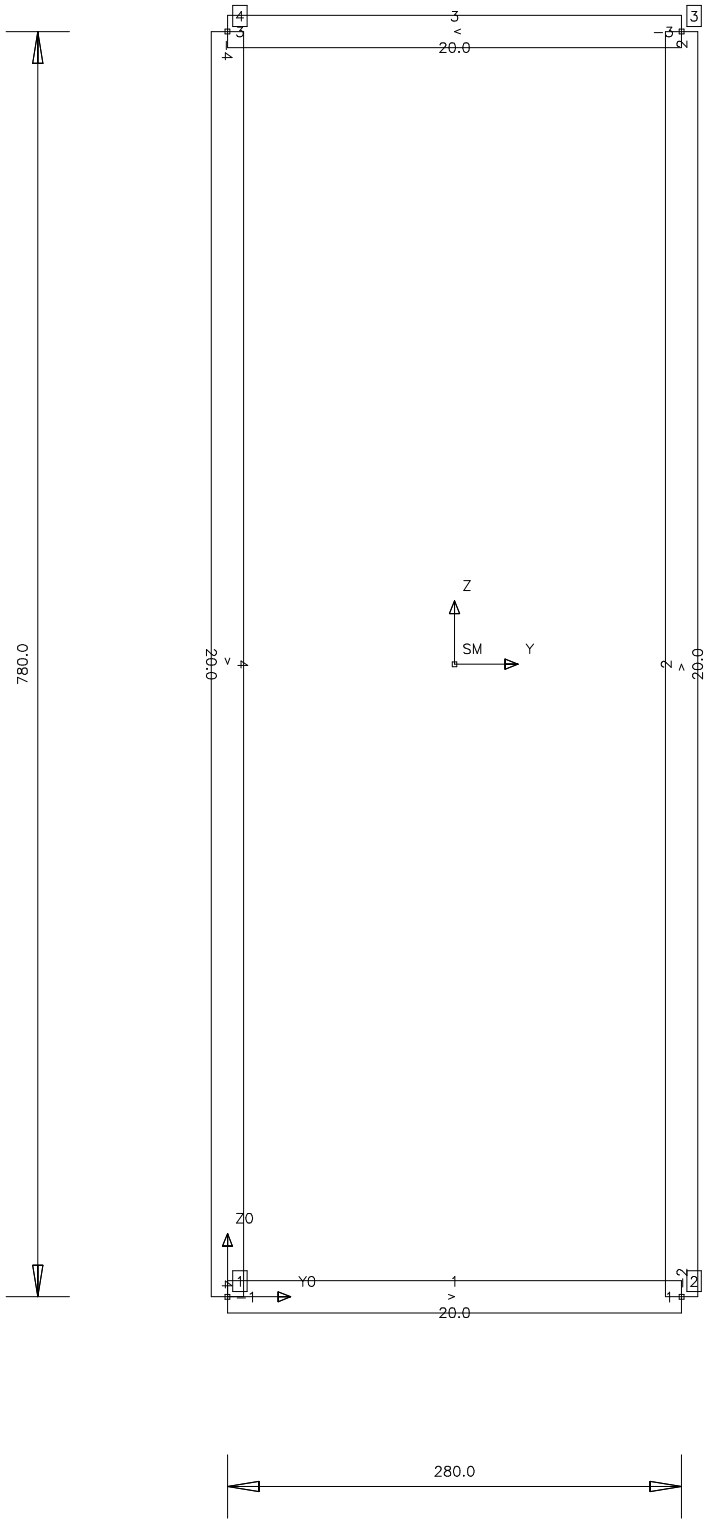

RR_800x400x20.
Ax: 46400. Ay: 10064. Az: 28617. [mm²]
Ix: 3029412414. Iy: 3893760000. Iz: 1309226667. [mm**4]
principle axis angle: .0 [°]
centre of gravity: ys: 190.0, zs: 390.0 [mm]
centre of shear forces: ym: 190.0, zm: 390.0 [mm]

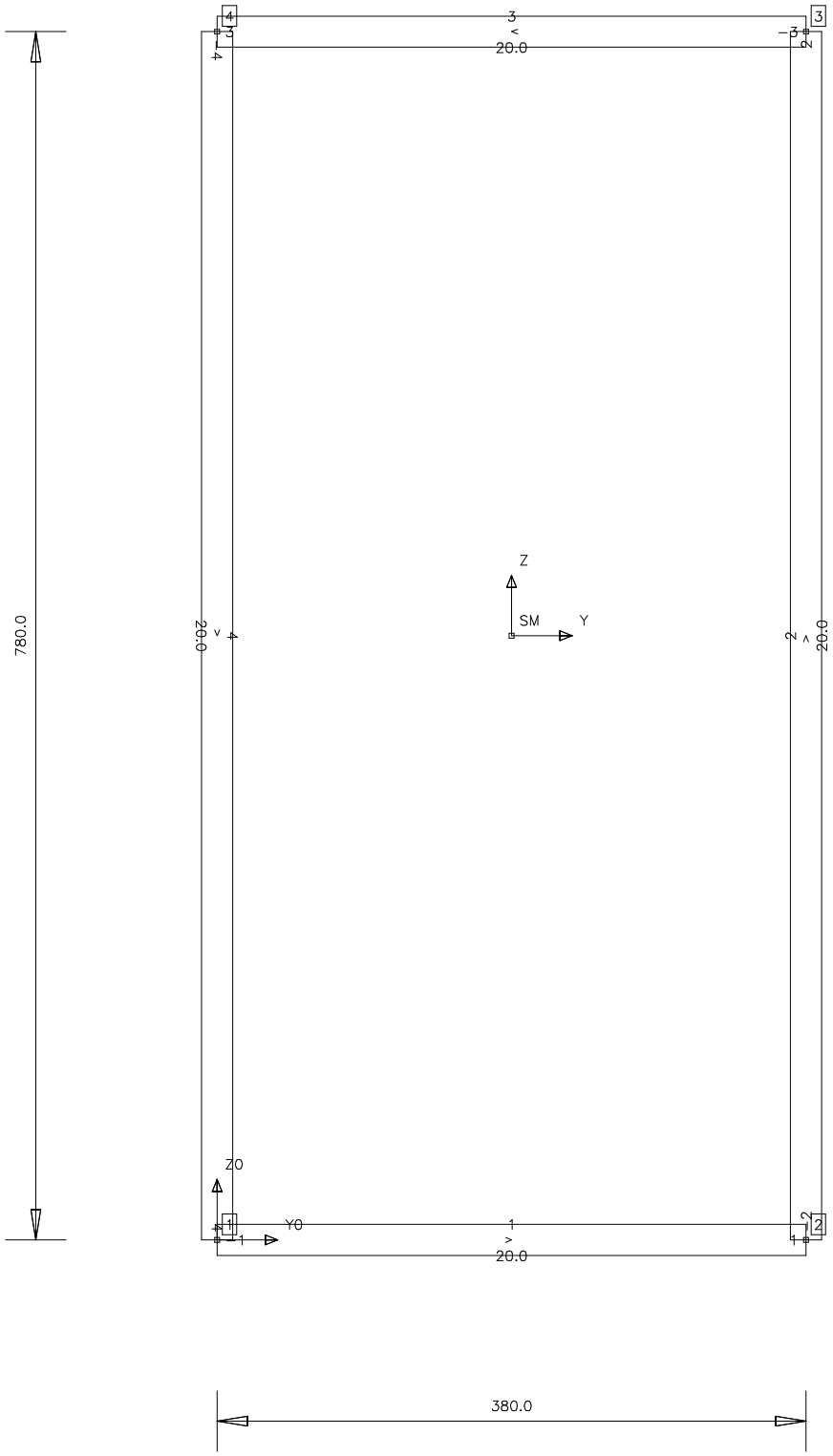

00000 - MUSTER Schiffsbelader_V03_023.kpl

```
documentation of input data

output date: 27.03.2013 13:11:00

data file: ...elader\Großes Modell\KRASTA\00000 - MUSTER Schiffsbelader_V03

6 Subsystems
393 Beams
242 Nodes
24 Cross Sections
19 Load Cases
33 Mass Cases

units:
  mm  N  kg  sec  °C  °  -  .


output of Mass Cases
====================

mass case name

$Permanent_Mass
  basic mass case
 situation: W+000 S+000 Ka
  total of node masses              :        .0   [kg]
  total of beam concentrated masses :        .0   [kg]
  total of distributed masses       :   53718.94  [kg]
  total of all masses               :   53718.94  [kg]
  centre of gravity                 :      3000.0,     -6671.5,      7527.7 [mm]

MB01 product dis
  basic mass case
 situation: W+000 S+000 Ka
  total of node masses              :        .0   [kg]
  total of beam concentrated masses :        .0   [kg]
  total of distributed masses       :    1800.0   [kg]
  total of all masses               :    1800.0   [kg]
  centre of gravity                 :      3000.0,     -8400.0,      8900.0 [mm]

MB01 product ka
  basic mass case
 situation: W+000 S+000 Ka
  total of node masses              :        .0   [kg]
  total of beam concentrated masses :        .0   [kg]
  total of distributed masses       :    1530.0   [kg]
  total of all masses               :    1530.0   [kg]
  centre of gravity                 :      3000.1,    -17650.0,      8399.9 [mm]

MB01 product ki
  basic mass case
 situation: W+000 S+000 Ka
  total of node masses              :        .0   [kg]
  total of beam concentrated masses :        .0   [kg]
  total of distributed masses       :      89.999 [kg]
  total of all masses               :      89.999 [kg]
  centre of gravity                 :      3000.1,    -21650.0,      8399.9 [mm]

MB01 product km
  basic mass case
```

```
 situation: W+000 S+000 Ka
  total of node masses              :        .0   [kg]
  total of beam concentrated masses :        .0   [kg]
  total of distributed masses       :     629.999 [kg]
  total of all masses               :     629.999 [kg]
  centre of gravity                 :      3000.1,    -20150.0,      8399.9 [mm]

MB02 conv   1
  basic mass case
 situation: W+000 S+000 Ka
  total of node masses              :        .0   [kg]
  total of beam concentrated masses :        .0   [kg]
  total of distributed masses       :    3000.0   [kg]
  total of all masses               :    3000.0   [kg]
  centre of gravity                 :      3000.0,     -8400.0,      8900.0 [mm]

MB03 conv   2
  basic mass case
 situation: W+000 S+000 Ka
  total of node masses              :        .0   [kg]
  total of beam concentrated masses :        .0   [kg]
  total of distributed masses       :    2550.0   [kg]
  total of all masses               :    2550.0   [kg]
  centre of gravity                 :      3000.1,    -17650.0,      8399.9 [mm]

MB04 belthead
  basic mass case
 situation: W+000 S+000 Ka
  total of node masses              :    1400.0   [kg]
  total of beam concentrated masses :        .0   [kg]
  total of distributed masses       :        .0   [kg]
  total of all masses               :    1400.0   [kg]
  centre of gravity                 :      3000.0,     -8400.0,      8650.0 [mm]

MB05 drive
  basic mass case
 situation: W+000 S+000 Ka
  total of node masses              :    1600.0   [kg]
  total of beam concentrated masses :        .0   [kg]
  total of distributed masses       :        .0   [kg]
  total of all masses               :    1600.0   [kg]
  centre of gravity                 :      3000.1,    -13400.0,      8400.0 [mm]

MB06 chute
  basic mass case
 situation: W+000 S+000 Ka
  total of node masses              :     500.0   [kg]
  total of beam concentrated masses :        .0   [kg]
  total of distributed masses       :        .0   [kg]
  total of all masses               :     500.0   [kg]
  centre of gravity                 :      3000.1,    -18950.0,      8599.9 [mm]

MB07 charger
  basic mass case
 situation: W+000 S+000 Ka
  total of node masses              :    1200.0   [kg]
  total of beam concentrated masses :        .0   [kg]
  total of distributed masses       :        .0   [kg]
  total of all masses               :    1200.0   [kg]
  centre of gravity                 :      3000.0,     -3900.0,      8900.0 [mm]

MB08 discharge p
  basic mass case
```

```
 situation: W+000 S+000 Ka
  total of node masses              :    3200.0   [kg]
  total of beam concentrated masses :        .0   [kg]
  total of distributed masses       :        .0   [kg]
  total of all masses               :    3200.0   [kg]
  centre of gravity                 :      3000.1,    -22650.0,      8399.9 [mm]

MB09 snatch bloc
  basic mass case
 situation: W+000 S+000 Ka
  total of node masses              :    1400.0   [kg]
  total of beam concentrated masses :        .0   [kg]
  total of distributed masses       :        .0   [kg]
  total of all masses               :    1400.0   [kg]
  centre of gravity                 :      3000.1,    -14308.2,     14174.1 [mm]

MB10 trolley
  basic mass case
 situation: W+000 S+000 Ka
  total of node masses              :        .0   [kg]
  total of beam concentrated masses :        .0   [kg]
  total of distributed masses       :    3000.0   [kg]
  total of all masses               :    3000.0   [kg]
  centre of gravity                 :      3000.1,    -18400.0,      8399.9 [mm]

MB11 ballast
  basic mass case
 situation: W+000 S+000 Ka
  total of node masses              :   17000.0   [kg]
  total of beam concentrated masses :        .0   [kg]
  total of distributed masses       :        .0   [kg]
  total of all masses               :   17000.0   [kg]
  centre of gravity                 :      2999.9,      7600.0,     11000.0 [mm]

MB12 bogies
  basic mass case
 situation: W+000 S+000 Ka
  total of node masses              :   32000.0   [kg]
  total of beam concentrated masses :        .0   [kg]
  total of distributed masses       :        .0   [kg]
  total of all masses               :   32000.0   [kg]
  centre of gravity                 :      3000.0,     -3950.0,      1000.0 [mm]

MB13 cabin
  basic mass case
 situation: W+000 S+000 Ka
  total of node masses              :    1800.0   [kg]
  total of beam concentrated masses :        .0   [kg]
  total of distributed masses       :        .0   [kg]
  total of all masses               :    1800.0   [kg]
  centre of gravity                 :      6000.0,     -6400.0,      7500.0 [mm]

MB14 winch
  basic mass case
 situation: W+000 S+000 Ka
  total of node masses              :    3000.0   [kg]
  total of beam concentrated masses :        .0   [kg]
  total of distributed masses       :        .0   [kg]
  total of all masses               :    3000.0   [kg]
  centre of gravity                 :      3000.0,     -1400.0,     11000.0 [mm]

MB15 hydraulics
  basic mass case
```

```
 situation: W+000 S+000 Ka
  total of node masses              :    2500.0   [kg]
  total of beam concentrated masses :        .0   [kg]
  total of distributed masses       :        .0   [kg]
  total of all masses               :    2500.0   [kg]
  centre of gravity                 :      3000.0,     -5400.0,      4000.0 [mm]

MB16 e-House
  basic mass case
 situation: W+000 S+000 Ka
  total of node masses              :        .0   [kg]
  total of beam concentrated masses :        .0   [kg]
  total of distributed masses       :   10000.0   [kg]
  total of all masses               :   10000.0   [kg]
  centre of gravity                 :      3000.0,     -1250.0,      4125.0 [mm]

MB17 slewing rin
  basic mass case
 situation: W+000 S+000 Ka
  total of node masses              :    5000.0   [kg]
  total of beam concentrated masses :        .0   [kg]
  total of distributed masses       :        .0   [kg]
  total of all masses               :    5000.0   [kg]
  centre of gravity                 :      3000.0,     -5400.0,      5500.0 [mm]

SBoom
  basic mass case
 situation: W+000 S+000 Ka
  total of node masses              :        .0   [kg]
  total of beam concentrated masses :        .0   [kg]
  total of distributed masses       :   14838.464 [kg]
  total of all masses               :   14838.464 [kg]
  centre of gravity                 :      3000.1,    -13819.2,      8667.4 [mm]

SPortal
  basic mass case
 situation: W+000 S+000 Ka
  total of node masses              :        .0   [kg]
  total of beam concentrated masses :        .0   [kg]
  total of distributed masses       :   30941.904 [kg]
  total of all masses               :   30941.904 [kg]
  centre of gravity                 :      3000.0,     -4208.1,      3794.1 [mm]

STowerTop
  basic mass case
 situation: W+000 S+000 Ka
  total of node masses              :    2500.0   [kg]
  total of beam concentrated masses :        .0   [kg]
  total of distributed masses       :        .0   [kg]
  total of all masses               :    2500.0   [kg]
  centre of gravity                 :      3000.0,     -7150.0,     19000.0 [mm]

SUpperCrane
  basic mass case
 situation: W+000 S+000 Ka
  total of node masses              :        .0   [kg]
  total of beam concentrated masses :        .0   [kg]
  total of distributed masses       :   30740.833 [kg]
  total of all masses               :   30740.833 [kg]
  centre of gravity                 :      3000.0,     -4646.4,     11100.5 [mm]
```

```
documentation of input data

output date: 27.03.2013 13:11:11

data file: ...elader\Großes Modell\KRASTA\00000 - MUSTER Schiffsbelader_V03

6 Subsystems
393 Beams
242 Nodes
24 Cross Sections
19 Load Cases
33 Mass Cases

units:
  mm  N  kg  sec  °C  °  -  .


output of Mass Cases
====================

mass case name
    factors and masses

DL SL
  combination mass case

    factor:          1.0       name:MB Boom
    factor:          1.0       name:MB Upper Crane
    factor:          1.0       name:SBoom
    factor:          1.0       name:STowerTop
    factor:          1.0       name:SUpperCrane


DL Total
  combination mass case

    factor:          1.0       name:STB
    factor:          1.0       name:MB Boom
    factor:          1.0       name:MB Portal
    factor:          1.0       name:MB Upper Crane


LL Boom
  combination mass case

    factor:          1.0       name:MB01 product dis
    factor:          1.0       name:LL Boom Situ


MB Boom
  combination mass case

    factor:          1.0       name:MB04 belthead
    factor:          1.0       name:MB05 drive
    factor:          1.0       name:MB06 chute
    factor:          1.0       name:MB07 charger
    factor:          1.0       name:MB09 snatch bloc
    factor:          1.0       name:MB08 discharge p
    factor:          1.0       name:MB10 trolley


MB Portal
  combination mass case
```

```
    factor:          1.0       name:MB12 bogies
    factor:          1.0       name:MB15 hydraulics
    factor:          1.0       name:MB16 e-House
    factor:          1.0       name:MB17 slewing rin


MB Upper Crane
  combination mass case

    factor:          1.0       name:MB11 ballast
    factor:          1.0       name:MB14 winch
    factor:          1.0       name:MB13 cabin


STB
  combination mass case

    factor:          1.0       name:SBoom
    factor:          1.0       name:SPortal
    factor:          1.0       name:STowerTop
    factor:          1.0       name:SUpperCrane
```


KRASTA® V9.7.0ß.4315 ©Kühne BSB GmbH, DE 64295 Darmstadt, +49(0)6151/397690-0
Lizenznehmer: Kühne BSB GmbH, Darmstadt

```
documentation of input data

output date: 27.03.2013 13:11:24

data file: ...elader\Großes Modell\KRASTA\00000 - MUSTER Schiffsbelader_V03

6 Subsystems
393 Beams
242 Nodes
24 Cross Sections
19 Load Cases
33 Mass Cases

units:
  mm  N  kg  sec  °C  °  -  .


output of Mass Cases
====================

mass case name
    factors and masses

LL Boom Situ
  situation dependent mass case

    default   : show warning
    situ. list: {Ka}                  =>        1.0    * MB01 product ka
    situ. list: {Km}                  =>        1.0    * MB01 product km
    situ. list: {Ki}                  =>        1.0    * MB01 product ki
    situ. list: {out of Service}      =>         .0    * MB01 product ka
```

```
documentation of input data

output date: 27.03.2013 13:11:37

data file: ...elader\Großes Modell\KRASTA\00000 - MUSTER Schiffsbelader_V03

6 Subsystems
393 Beams
242 Nodes
24 Cross Sections
19 Load Cases
33 Mass Cases

units:
  mm  N  kg  sec  °C  °  -  .


output of Load Cases
====================

load case name
    all loads

DL Total
  basic load case

    1. acceleration load; gravity
        mass case: DL Total
        description in inertial system
        direction vector:       .0         .0       -1.0
        acceleration:   9810.0

 situation: W+000 S+000 Ka
  total of node loads        :         .0 ,         .0 ,  -717111.03 [N]
  total of beam conc. loads  :         .0 ,         .0 ,         .0  [N]
  total of distrib. loads    :         .0 ,         .0 ,  -878203.01 [N]
  total of all forces        :         .0 ,         .0 , -1595314.05 [N]
  total of node moments      :          0.,          0.,          0. [Nmm]
  total of beam conc. moments:          0.,          0.,          0. [Nmm]
  total of distrib. moments  :          0.,          0.,          0. [Nmm]
  total of all moments       :          0.,          0.,          0. [Nmm]
  reference point            :          .0,          .0,          .0 [mm]
  resulting moments          :  7.4258E+09,  4.8389E+09,          0. [Nmm]
  point of balanced overturning moments
              at x-y plane:      3033.2,     -4654.7,          .0 [mm]

DR +x
  basic load case

    1. acceleration load; translational
        mass case: DL Total
        description in inertial system
        direction vector:      1.0         .0         .0
        acceleration:    250.0
```

```
 situation: W+000 S+000 Ka
  total of node loads        :   -18275.0 ,         .0 ,         .0  [N]
  total of beam conc. loads  :         .0 ,         .0 ,         .0  [N]
  total of distrib. loads    :   -22380.3 ,         .0 ,         .0  [N]
  total of all forces        :   -40655.3 ,         .0 ,         .0  [N]
  total of node moments      :          0.,          0.,          0. [Nmm]
  total of beam conc. moments:          0.,          0.,          0. [Nmm]
  total of distrib. moments  :          0.,          0.,          0. [Nmm]
  total of all moments       :          0.,          0.,          0. [Nmm]
  reference point            :          .0,          .0,          .0 [mm]
  resulting moments          :          0., -272862314., -189239824. [Nmm]
  point of balanced overturning moments
              at y-z plane:          .0,     -4654.7,      6711.6 [mm]

LL
  basic load case

    1. acceleration load; gravity
        mass case: LL Boom
        description in inertial system
        direction vector:       .0         .0       -1.0
        acceleration:   9810.0

 situation: W+000 S+000 Ka
  total of node loads        :         .0 ,         .0 ,         .0  [N]
  total of beam conc. loads  :         .0 ,         .0 ,         .0  [N]
  total of distrib. loads    :         .0 ,         .0 ,   -32667.3  [N]
  total of all forces        :         .0 ,         .0 ,   -32667.3  [N]
  total of node moments      :          0.,          0.,          0. [Nmm]
  total of beam conc. moments:          0.,          0.,          0. [Nmm]
  total of distrib. moments  :          0.,          0.,          0. [Nmm]
  total of all moments       :          0.,          0.,          0. [Nmm]
  reference point            :          .0,          .0,          .0 [mm]
  resulting moments          :  413241454.,   98003804.,          0. [Nmm]
  point of balanced overturning moments
              at x-y plane:      3000.1,    -12650.0,          .0 [mm]

SL
  basic load case

    1. acceleration load; rotational
        mass case: DL SL
        description in inertial system
        relative to reference node: [upper crane].K  31
        distance  to axis of rotation:       .0         .0         .0
        direction of axis of rotation:       .0         .0        1.0
        rotational acceleration:       .3
        rotational speed:       .0

 situation: W+000 S+000 Ka
  total of node loads        :      718.27,      -28.27,         .0  [N]
  total of beam conc. loads  :         .0 ,         .0 ,         .0  [N]
  total of distrib. loads    :     -737.03, -6.6367E-03,         .0  [N]
  total of all forces        :      -18.76,      -28.28,         .0  [N]
  total of node moments      :          0.,          0.,          0. [Nmm]
  total of beam conc. moments:          0.,          0.,          0. [Nmm]
  total of distrib. moments  :          0.,          0.,          0. [Nmm]
  total of all moments       :          0.,          0.,          0. [Nmm]
  reference point            :          .0,          .0,          .0 [mm]
  resulting moments          :     212096.,    2615339.,  -36078160. [Nmm]
  point of balanced overturning moments
              at y-z plane:          .0,  -1922830.6,   -139387.7 [mm]
              at x-z plane:   1275754.4,          .0,      7499.9 [mm]
```

```
W 20 m/s +x
  basic load case

    1. wind load; wind profile: W 20m/s +x
        factor:    3.0E+06
        list name: w_ballast               list type: Knoten, Simple List
        elements:
          upper crane (K   8;K   9;K 179;K 180)

    2. wind load
        factor:    1.3E+06
        list name: w_top pulley            list type: Knoten, Simple List
        elements:
          upper crane (K  43;K  44)

    3. wind load
        factor:    250.0
        list name: w_boom +0.25m           list type: Stäbe, Simple List
        elements:
          boom (Item 012.  53;Item 012.  54;Item 013.  63;Item 013.  64;
                Item 013.  65;Item 013.  66;Item 013.  67;Item 013.  68;
                Item 013.  69;Item 013.  70;Item 013.  71;Item 013.  72;
                Item 013.  73;Item 013.  74;Item 013.  75;Item 013.  76;
                Item 013.  77;Item 013.  78;Item 013.  79;Item 013.  80;
                Item 013.  81;Item 013.  82;Item 013.  83;Item 013.  84;
                Item 013.  85;Item 013.  86;Item 013.  87;Item 013.  88;
                Item 013.  89;Item 013.  90;Item 013.  91;Item 013.  92;
                Item 013.  94;Item 013.  95;Item 013.  97;Item 013.  99)

    4. wind load
        factor:   1800.0
        list name: w_slewing tower         list type: Stäbe, Simple List
        elements:
          portal (rigid  47)
          upper crane (rigid  58)

    5. wind load
        factor:    800.0
        list name: w_up +0.8m              list type: Stäbe, Simple List
        elements:
          upper crane (Item 006.   1;Item 006.   3;Item 006.   5;
                       Item 006.   6;Item 006.  15;Item 006.  16;
                       Item 007.   2)

    6. wind load
        factor:   1950.0
        list name: w_po +3.9/2m            list type: Stäbe, Simple List
        elements:
          portal (Item 002.   1;Item 002.   2;Item 002.  11;
                  Item 003.   1;Item 003.   4;Item 005.   1;
                  Item 005.   2;Item 005.   3)

    7. wind load
        factor:   1200.0
        list name: w_DT 600_PO             list type: Stäbe, Filter List
        elements:
          portal (Item 004.   1;Item 004.   2;Item 004.   3;
                  Item 004.   4)

    8. wind load
        factor:    600.0
        list name: w_HEB 300               list type: Stäbe, Filter List
        elements:
```

```
9. wind load
    factor:   1600.0
    list name: w_HEB 800               list type: Stäbe, Filter List
    elements:
      upper crane (Item 006.   1;Item 006.   2;Item 006.   3;
                   Item 006.   4;Item 006.   5;Item 006.   6;
                   Item 006.   7;Item 006.   8;Item 006.   9;
                   Item 006.  10;Item 006.  11;Item 006.  12;
                   Item 006.  13;Item 006.  14;Item 006.  15;
                   Item 006.  16;Item 006.  17;Item 006.  18;
                   Item 006.  19;Item 006.  20;Item 006.  21;
                   Item 006.  22)

10. wind load
    factor:    400.0
    list name: w_HEB/RR 200            list type: Stäbe, Filter List
    elements:
      upper crane (Item 010.   1;Item 010.   2;Item 010.   3)
      boom (Item 013.  49;Item 013.  50;Item 013.  51;Item 013.  52;
            Item 013.  53;Item 013.  54;Item 013.  55;Item 013.  56;
            Item 013.  57;Item 013.  58;Item 013.  59;Item 013.  60;
            Item 013.  61;Item 013.  62;Item 013.  63;Item 013.  64;
            Item 013.  65;Item 013.  66;Item 013.  67;Item 013.  68;
            Item 013.  69;Item 013.  70;Item 013.  71;Item 013.  72;
            Item 013.  73;Item 013.  74;Item 013.  75;Item 013.  76;
            Item 013.  77;Item 013.  78;Item 013.  79;Item 013.  80;
            Item 013.  81;Item 013.  82;Item 013.  83;Item 013.  84;
            Item 013.  85;Item 013.  86;Item 013.  87;Item 013.  88;
            Item 013.  89;Item 013.  90;Item 013.  91;Item 013.  92;
            Item 013.  93;Item 013.  94;Item 013.  95;Item 013.  96;
            Item 013.  97;Item 013.  98;Item 013.  99;Item 013. 100;
            Item 013. 101;Item 013. 102;Item 013. 103;Item 013. 104;
            Item 013. 105;Item 013. 106;Item 013. 107;Item 016.  11;
            Item 016.  12;Item 016.  13;Item 016.  14;Item 016.  15;
            Item 016.  16;Item 016.  17;Item 016.  18;Item 016.  19;
            Item 016.  20;Item 016.  21;Item 016.  22;Item 016.  23;
            Item 016.  24;Item 016.  25;Item 016.  26;Item 016.  27;
            Item 016.  28;Item 016.  29;Item 016.  30;Item 016.  31;
            Item 016.  32;Item 016.  33;Item 016.  34;Item 016.  35;
            Item 016.  36;Item 016.  37;Item 016.  38;Item 016.  39;
            Item 016.  40;Item 016.  41;Item 016.  42;Item 016.  43;
            Item 016.  44;Item 016.  45;Item 016.  46;Item 016.  47;
            Item 016.  48;Item 016.  49;Item 016.  50;Item 016.  51;
            Item 016.  52;Item 016.  53;Item 016.  54;Item 016.  55;
            Item 016.  56;Item 016.  57;Item 016.  58)

11. wind load
    factor:    280.0
    list name: w_IPE 140               list type: Stäbe, Filter List
    elements:

12. wind load
    factor:    320.0
    list name: w_IPE 160               list type: Stäbe, Filter List
    elements:

13. wind load
    factor:    240.0
    list name: w_IPE/RR 120            list type: Stäbe, Filter List
    elements:
      boom (Item 014.   1;Item 014.   2;Item 014.   3;Item 014.   4;
            Item 014.   5;Item 014.   6;Item 014.   7;Item 014.   8;
            Item 014.   9;Item 014.  10;Item 014.  11;Item 014.  12;
            Item 014.  13;Item 014.  14;Item 014.  15;Item 014.  16;
            Item 017.   1;Item 017.   2;Item 017.   3;Item 017.   4;
            Item 017.   5;Item 017.   6;Item 017.   7;Item 017.   8;
```

```
                Item 017.   9;Item 017.  10;Item 017.  11)

    14. wind load
        factor:     80.0
        list name: w_RR  40                list type: Stäbe, Filter List
        elements:
          boom (Item 018.   1;Item 018.   2;Item 018.   3;Item 018.   4;
                Item 018.   5;Item 018.   6;Item 018.   7;Item 018.   8;
                Item 018.   9;Item 018.  10)

    15. wind load
        factor:    160.0
        list name: w_RR  80                list type: Stäbe, Filter List
        elements:
          boom (Item 015.  12;Item 015.  13;Item 015.  14;Item 015.  15;
                Item 015.  16;Item 015.  17;Item 015.  18;Item 015.  19;
                Item 015.  20;Item 015.  21;Item 015.  22;Item 015.  23;
                Item 015.  24;Item 015.  25;Item 015.  26;Item 015.  27;
                Item 015.  28;Item 015.  29;Item 015.  30;Item 015.  31;
                Item 015.  32;Item 015.  33;Item 015.  34;Item 015.  35;
                Item 015.  36;Item 015.  37;Item 015.  38;Item 015.  39;
                Item 015.  40;Item 015.  41;Item 015.  42;Item 015.  43;
                Item 015.  44;Item 015.  45;Item 015.  46;Item 015.  47;
                Item 015.  48;Item 015.  49;Item 015.  50;Item 015.  51;
                Item 015.  52;Item 015.  53;Item 015.  54;Item 015.  55;
                Item 015.  56;Item 015.  57;Item 015.  58;Item 015.  59;
                Item 015.  60)

    16. wind load
        factor:   1200.0
        list name: w_RR 600/250_PO         list type: Stäbe, Filter List
        elements:

    17. wind load
        factor:   1600.0
        list name: w_RR 800                list type: Stäbe, Simple List
        elements:
          upper crane (Item 008.   2;Item 008.   3;Item 009.   1;
                       Item 009.   2)

    18. wind load
        factor:    5.0E+06
        list name: w_cabin                 list type: Knoten, Simple List
        elements:
          upper crane (K   4;K   5)

  situation: W+000 S+000 Ka
   total of node loads        :     6150.0 ,         .0 ,         .0  [N]
   total of beam conc. loads  :         .0 ,         .0 ,         .0  [N]
   total of distrib. loads    :    44031.94,      229.55, -1.3803E-03 [N]
   total of all forces        :    50181.94,      229.55, -1.3803E-03 [N]
   total of node moments      :          0.,          0.,          0. [Nmm]
   total of beam conc. moments:          0.,          0.,          0. [Nmm]
   total of distrib. moments  :          0.,          0.,          0. [Nmm]
   total of all moments       :          0.,          0.,          0. [Nmm]
   reference point            :          .0,          .0,          .0 [mm]
   resulting moments          :   -1836596.,  482911608.,  433078176. [Nmm]
   point of balanced overturning moments
               at y-z plane:          .0,     -8630.2,      9623.2 [mm]
               at x-z plane:   1886636.9,          .0,      8000.8 [mm]

 W 20 m/s +y
   basic load case
```

```
1. wind load; wind profile: W 20m/s +y
    factor:    3.0E+06
    list name: w_ballast               list type: Knoten, Simple List
    elements:
      upper crane (K   8;K   9;K 179;K 180)

2. wind load
    factor:    1.3E+06
    list name: w_top pulley            list type: Knoten, Simple List
    elements:
      upper crane (K  43;K  44)

3. wind load
    factor:    250.0
    list name: w_boom +0.25m           list type: Stäbe, Simple List
    elements:
      boom (Item 012.  53;Item 012.  54;Item 013.  63;Item 013.  64;
            Item 013.  65;Item 013.  66;Item 013.  67;Item 013.  68;
            Item 013.  69;Item 013.  70;Item 013.  71;Item 013.  72;
            Item 013.  73;Item 013.  74;Item 013.  75;Item 013.  76;
            Item 013.  77;Item 013.  78;Item 013.  79;Item 013.  80;
            Item 013.  81;Item 013.  82;Item 013.  83;Item 013.  84;
            Item 013.  85;Item 013.  86;Item 013.  87;Item 013.  88;
            Item 013.  89;Item 013.  90;Item 013.  91;Item 013.  92;
            Item 013.  94;Item 013.  95;Item 013.  97;Item 013.  99)

4. wind load
    factor:   1800.0
    list name: w_slewing tower         list type: Stäbe, Simple List
    elements:
      portal (rigid  47)
      upper crane (rigid  58)

5. wind load
    factor:    800.0
    list name: w_up +0.8m              list type: Stäbe, Simple List
    elements:
      upper crane (Item 006.   1;Item 006.   3;Item 006.   5;
                   Item 006.   6;Item 006.  15;Item 006.  16;
                   Item 007.   2)

6. wind load
    factor:   1950.0
    list name: w_po +3.9/2m            list type: Stäbe, Simple List
    elements:
      portal (Item 002.   1;Item 002.   2;Item 002.  11;
              Item 003.   1;Item 003.   4;Item 005.   1;
              Item 005.   2;Item 005.   3)

7. wind load
    factor:   1200.0
    list name: w_DT 600_PO             list type: Stäbe, Filter List
    elements:
      portal (Item 004.   1;Item 004.   2;Item 004.   3;
              Item 004.   4)

8. wind load
    factor:    600.0
    list name: w_HEB 300               list type: Stäbe, Filter List
    elements:

9. wind load
    factor:   1600.0
    list name: w_HEB 800               list type: Stäbe, Filter List
    elements:
      upper crane (Item 006.   1;Item 006.   2;Item 006.   3;
```

```
                    Item 006.   4;Item 006.   5;Item 006.   6;
                    Item 006.   7;Item 006.   8;Item 006.   9;
                    Item 006.  10;Item 006.  11;Item 006.  12;
                    Item 006.  13;Item 006.  14;Item 006.  15;
                    Item 006.  16;Item 006.  17;Item 006.  18;
                    Item 006.  19;Item 006.  20;Item 006.  21;
                    Item 006.  22)

10. wind load
    factor:    400.0
    list name: w_HEB/RR 200            list type: Stäbe, Filter List
    elements:
      upper crane (Item 010.   1;Item 010.   2;Item 010.   3)
      boom (Item 013.  49;Item 013.  50;Item 013.  51;Item 013.  52;
            Item 013.  53;Item 013.  54;Item 013.  55;Item 013.  56;
            Item 013.  57;Item 013.  58;Item 013.  59;Item 013.  60;
            Item 013.  61;Item 013.  62;Item 013.  63;Item 013.  64;
            Item 013.  65;Item 013.  66;Item 013.  67;Item 013.  68;
            Item 013.  69;Item 013.  70;Item 013.  71;Item 013.  72;
            Item 013.  73;Item 013.  74;Item 013.  75;Item 013.  76;
            Item 013.  77;Item 013.  78;Item 013.  79;Item 013.  80;
            Item 013.  81;Item 013.  82;Item 013.  83;Item 013.  84;
            Item 013.  85;Item 013.  86;Item 013.  87;Item 013.  88;
            Item 013.  89;Item 013.  90;Item 013.  91;Item 013.  92;
            Item 013.  93;Item 013.  94;Item 013.  95;Item 013.  96;
            Item 013.  97;Item 013.  98;Item 013.  99;Item 013. 100;
            Item 013. 101;Item 013. 102;Item 013. 103;Item 013. 104;
            Item 013. 105;Item 013. 106;Item 013. 107;Item 016.  11;
            Item 016.  12;Item 016.  13;Item 016.  14;Item 016.  15;
            Item 016.  16;Item 016.  17;Item 016.  18;Item 016.  19;
            Item 016.  20;Item 016.  21;Item 016.  22;Item 016.  23;
            Item 016.  24;Item 016.  25;Item 016.  26;Item 016.  27;
            Item 016.  28;Item 016.  29;Item 016.  30;Item 016.  31;
            Item 016.  32;Item 016.  33;Item 016.  34;Item 016.  35;
            Item 016.  36;Item 016.  37;Item 016.  38;Item 016.  39;
            Item 016.  40;Item 016.  41;Item 016.  42;Item 016.  43;
            Item 016.  44;Item 016.  45;Item 016.  46;Item 016.  47;
            Item 016.  48;Item 016.  49;Item 016.  50;Item 016.  51;
            Item 016.  52;Item 016.  53;Item 016.  54;Item 016.  55;
            Item 016.  56;Item 016.  57;Item 016.  58)

11. wind load
    factor:    280.0
    list name: w_IPE 140               list type: Stäbe, Filter List
    elements:

12. wind load
    factor:    320.0
    list name: w_IPE 160               list type: Stäbe, Filter List
    elements:

13. wind load
    factor:    600.0
    list name: w_IPE 300_PO            list type: Stäbe, Filter List
    elements:
      portal (Item 005.   1;Item 005.   2;Item 005.   3)
      trolley (Item 019.   1;Item 019.   2;Item 019.   3;
               Item 019.   4;Item 019.   5;Item 019.   6;
               Item 019.   7;Item 019.   8;Item 019.   9;
               Item 019.  10;Item 019.  11)

14. wind load
    factor:    240.0
    list name: w_IPE/RR 120            list type: Stäbe, Filter List
    elements:
      boom (Item 014.   1;Item 014.   2;Item 014.   3;Item 014.   4;
```

```
                Item 014.   5;Item 014.   6;Item 014.   7;Item 014.   8;
                Item 014.   9;Item 014.  10;Item 014.  11;Item 014.  12;
                Item 014.  13;Item 014.  14;Item 014.  15;Item 014.  16;
                Item 017.   1;Item 017.   2;Item 017.   3;Item 017.   4;
                Item 017.   5;Item 017.   6;Item 017.   7;Item 017.   8;
                Item 017.   9;Item 017.  10;Item 017.  11)

    15. wind load
        factor:     80.0
        list name: w_RR  40                list type: Stäbe, Filter List
        elements:
          boom (Item 018.   1;Item 018.   2;Item 018.   3;Item 018.   4;
                Item 018.   5;Item 018.   6;Item 018.   7;Item 018.   8;
                Item 018.   9;Item 018.  10)

    16. wind load
        factor:    160.0
        list name: w_RR  80                list type: Stäbe, Filter List
        elements:
          boom (Item 015.  12;Item 015.  13;Item 015.  14;Item 015.  15;
                Item 015.  16;Item 015.  17;Item 015.  18;Item 015.  19;
                Item 015.  20;Item 015.  21;Item 015.  22;Item 015.  23;
                Item 015.  24;Item 015.  25;Item 015.  26;Item 015.  27;
                Item 015.  28;Item 015.  29;Item 015.  30;Item 015.  31;
                Item 015.  32;Item 015.  33;Item 015.  34;Item 015.  35;
                Item 015.  36;Item 015.  37;Item 015.  38;Item 015.  39;
                Item 015.  40;Item 015.  41;Item 015.  42;Item 015.  43;
                Item 015.  44;Item 015.  45;Item 015.  46;Item 015.  47;
                Item 015.  48;Item 015.  49;Item 015.  50;Item 015.  51;
                Item 015.  52;Item 015.  53;Item 015.  54;Item 015.  55;
                Item 015.  56;Item 015.  57;Item 015.  58;Item 015.  59;
                Item 015.  60)

    17. wind load
        factor:   1200.0
        list name: w_RR 600/250_PO         list type: Stäbe, Filter List
        elements:

    18. wind load
        factor:   1200.0
        list name: w_RR 600/400_PO         list type: Stäbe, Simple List
        elements:
          portal (Item 001.  41;Item 001.  42;Item 001.  43;
                  Item 001.  44;Item 002.   1;Item 002.   2;
                  Item 002.   3;Item 002.   4;Item 002.  11;
                  Item 002.  12;rigid  43)

    19. wind load
        factor:   1600.0
        list name: w_RR 800                list type: Stäbe, Simple List
        elements:
          upper crane (Item 008.   2;Item 008.   3;Item 009.   1;
                       Item 009.   2)

    20. wind load
        factor:    5.0E+06
        list name: w_cabin                 list type: Knoten, Simple List
        elements:
          upper crane (K   4;K   5)
```

```
situation: W+000 S+000 Ka
 total of node loads        :         .0 ,     6150.0 ,         .0  [N]
 total of beam conc. loads  :         .0 ,         .0 ,         .0  [N]
 total of distrib. loads    :      229.57,    35036.7 ,      854.99 [N]
 total of all forces        :      229.57,    41186.7 ,      854.99 [N]
 total of node moments      :          0.,          0.,          0. [Nmm]
 total of beam conc. moments:          0.,          0.,          0. [Nmm]
 total of distrib. moments  :          0.,          0.,          0. [Nmm]
 total of all moments       :          0.,          0.,          0. [Nmm]
 reference point            :          .0,          .0,          .0 [mm]
 resulting moments          : -328584552.,    -728203.,  132411063. [Nmm]
 point of balanced overturning moments
             at y-z plane:          .0,   -576776.6,     -3172.0 [mm]
             at x-z plane:      3214.9,          .0,      7977.9 [mm]
             at x-y plane:       851.7,   -384314.6,          .0 [mm]
```


KRASTA® V9.7.0ß.4315 ©Kühne BSB GmbH, DE 64295 Darmstadt, +49(0)6151/397690-0
Lizenznehmer: Kühne BSB GmbH, Darmstadt

```
documentation of input data

output date: 27.03.2013 13:11:47

data file: ...elader\Großes Modell\KRASTA\00000 - MUSTER Schiffsbelader_V03

6 Subsystems
393 Beams
242 Nodes
24 Cross Sections
19 Load Cases
33 Mass Cases

units:
  mm  N  kg  sec  °C  °  -  .


output of Load Cases
====================

load case name
    all loads

W 51,75m/s +x
  combination load case

          6.695  * W 20 m/s +x


W 51,75m/s +y
  combination load case

          6.695  * W 20 m/s +y
```

```
documentation of input data

output date: 27.03.2013 13:12:00

data file: ...elader\Großes Modell\KRASTA\00000 - MUSTER Schiffsbelader_V03

6 Subsystems
393 Beams
242 Nodes
24 Cross Sections
19 Load Cases
33 Mass Cases

units:
  mm  N  kg  sec  °C  °  -  .


output of Load Cases
====================

load case name
    all loads

H1.
  logic load case

    all of the following load cases act concurrently
          1.0    * DL Total  only positive
          1.0    * LL Boom 0.9/1.1.  only positive
          1.0    * SL  pos. or neg.


H2.
  logic load case

    all of the following load cases act concurrently
          1.1    * DL Total  only positive
           .1    * LL  only positive
          1.0    * DR +x  pos. or neg.


HS1.
  logic load case

    all of the following load cases act concurrently
          1.0    * DL Total  only positive
          1.0    * W aB Logic  only positive


HZ1.
  logic load case

    all of the following load cases act concurrently
          1.0    * H1.  only positive
          1.0    * W iB Logic  only positive


HZ2.
  logic load case

    all of the following load cases act concurrently
          1.0    * H2.  only positive
          1.0    * W iB Logic  only positive
```

```
LL Boom 0.1 +/-
  logic load case

    exactly one of the following load cases acts at a time
           .1    * LL  pos. or neg.


LL Boom 0.9/1.1.
  logic load case

    all of the following load cases act concurrently
          1.0    * LL  only positive
          1.0    * LL Boom 0.1 +/-  only positive


W aB Logic
  logic load case

    exactly one of the following load cases acts at a time
          1.0    * W 51,75m/s +x  pos. or neg.
          1.0    * W 51,75m/s +y  pos. or neg.


W iB Logic
  logic load case

    exactly one of the following load cases acts at a time
          1.0    * W 20 m/s +x  pos. or neg.
          1.0    * W 20 m/s +y  pos. or neg.


in Service
  logic load case

    exactly one of the following load cases acts at a time
          1.5    * H1.  only positive
          1.33   * HZ1.  only positive


out of Service
  logic load case

    exactly one of the following load cases acts at a time
          1.5    * H2.  only positive
          1.33   * HZ2.  only positive
          1.21   * HS1.  only positive
```